

CITY OF MANKATO
STANDARD PLATES

APPROVED _____ Michael J McCarty Digitally signed by Michael J McCarty Date: 2022.10.28 12:13:56-05'00' _____ CITY ENGINEER	CITY OF MANKATO ENGINEERING STANDARD PLATES TITLE SHEET	SPECIFICATION REFERENCE	STANDARD PLATE NO. **NA** 1 OF 1

CITY OF MANKATO – STANDARD PLATES

TABLE OF CONTENTS

2002A – TEMPORARY MANHOLE INSERTS
2003A – STABILIZED CONSTRUCTION EXIT
2100A – GRANULAR BEDDING & ENCASEMENT
2101B – DETAIL OF SANITARY & WATER IN THE SAME TRENCH
2102A – LIMITS OF TRENCH EXCAVATION
2200A – SANITARY SEWER MANHOLE
2201C – SANITARY SEWER OUTSIDE DROP MANHOLE
2202A – AIR RELEASE MANHOLE
2203A – I&I BARRIER
2240A – STANDARD SANITARY SERVICE
2241A – DEEP SANITARY SERVICE DETAIL
2242A – SANITARY SERVICE CLEANOUT
2320A – WATERMAIN CONSTRUCTION AROUND OBSTACLES
2321A – GATE VALVE ADAPTER
2322A – HYDRANT DETAIL
2323A – POLYSTYRENE INSULATION
2340B – WATER SERVICE
2360A – WATER FLUSHING PORT
2402C – MANKATO STANDARD CATCH BASIN NO. 3
2403A – VELOCITY REDUCING OUTLET STRUCTURE
2404A – PIPE AND ANCHOR DETAIL
2420B – DRAIN TILE TRENCH DETAIL
2421A1 – DRAIN TILE CLEANOUT END/THRU BOULEVARD CONDITION
2421A2 – DRAIN TILE CLEANOUT END/THRU BOULEVARD CONDITION
2440A1 – 4” DRAIN STUB
2440A2 – 4” DRAIN STUB CONNECTION
2460B – INTERIM TYPE 3 CATCH BASIN DRAIN
2500A – S-418 MODIFIED CURB AND GUTTER
2501A – B-STYLE MODIFIED CURB AND GUTTER
2650A – LIGHT BASE DESIGN STEEL (E)
2651A – LIGHT BASE DESIGN STEEL (P)
2660A – 100 AMP LIGHTING SERVICE
2661A – 200 AMP LIGHTING SERVICE
2700A – PARKING STANDARDS
2710B – BOLLARD ANCHORING
2720A1 – STD. NDCBU MAILBOX LOCATION
2720A2 – STD. NDCBU MAILBOX LOCATION
2720A3 – STD. NDCBU MAILBOX LOCATION – MULTIPLE UNIT
2721A – STANDARD MAILBOX LOCATION
2740A1 – GPS 3-D TOP SECURITY ROD MONUMENT SYSTEM
2740A2 – GPS 3-D TOP SECURITY ROD MONUMENT SYSTEM

APPROVED	CITY OF MANKATO ENGINEERING	SPECIFICATION REFERENCE	STANDARD PLATE NO.
Michael J McCarty Digitally signed by Michael J McCarty Date: 2022.10.28 12:14:00-05'00' CITY ENGINEER	STANDARD PLATES TABLE OF CONTENTS		NA 1 OF 1

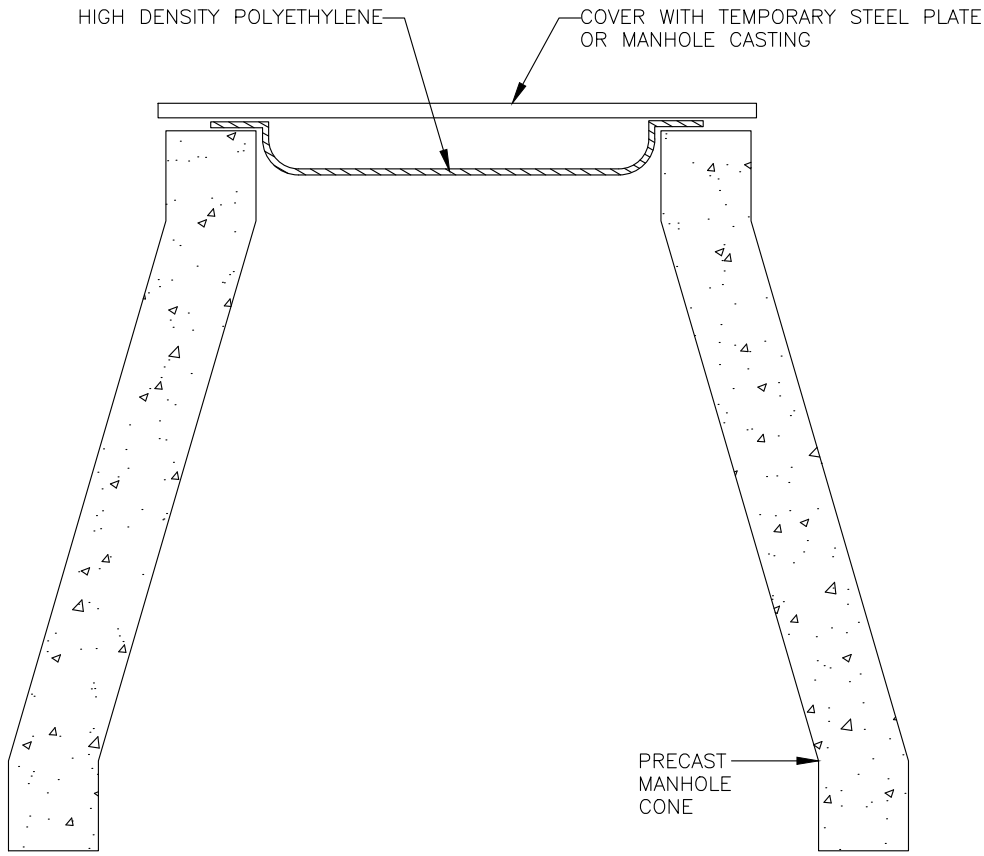

NOTE:
FOR ALL SANITARY MANHOLE AND STORM DRAINS THAT DO NOT HAVE INLET PROTECTION

APPROVED Michael J McCarty Digitally signed by Michael J McCarty Date: 2022.10.28 12:14:03-05'00' CITY ENGINEER	CITY OF MANKATO ENGINEERING TEMPORARY MANHOLE INSERTS	SPECIFICATION REFERENCE	STANDARD PLATE NO. **2002A** 1 OF 1

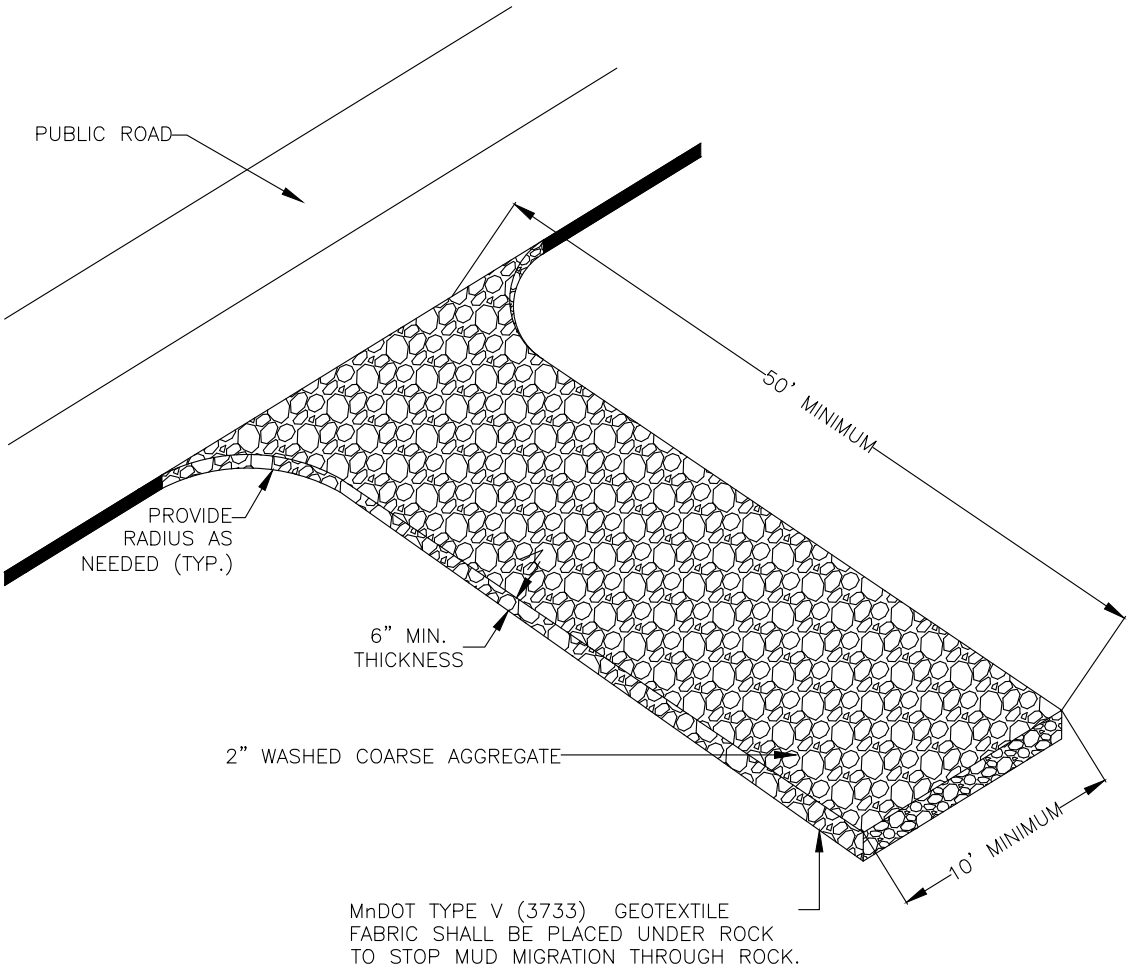

APPROVED

Michael J McCarty

Digitally signed by Michael J McCarty
Date: 2022.10.28 12:14:06-05'00'

CITY ENGINEER

CITY OF MANKATO
ENGINEERING

STABILIZED CONSTRUCTION EXIT

SPECIFICATION REFERENCE

STANDARD PLATE NO.

2003A

1 OF 1

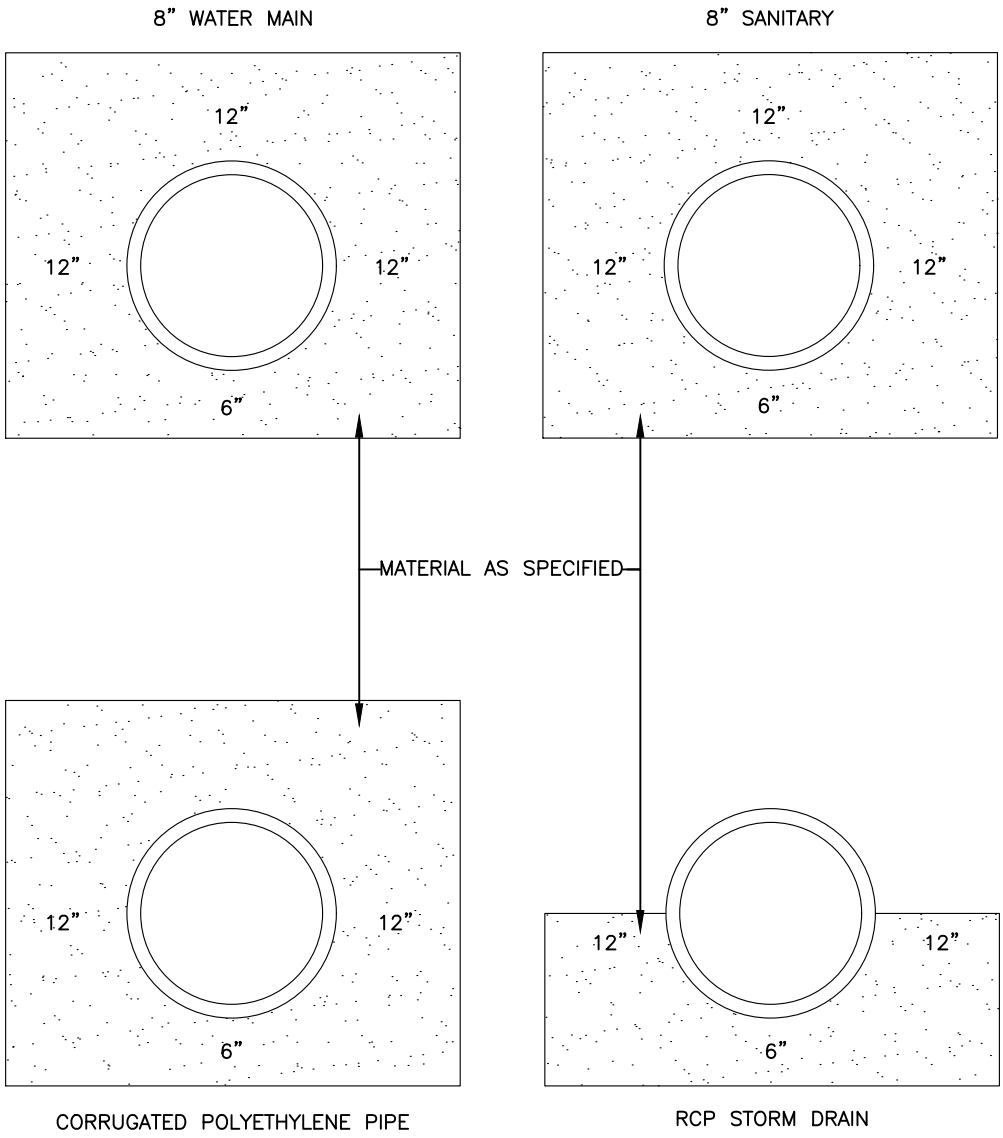

APPROVED

Michael J McCarty

Digitally signed by Michael J McCarty
Date: 2022.10.28 12:14:09-05'00'

CITY ENGINEER

CITY OF MANKATO
ENGINEERING

GRANULAR BEDDING & ENCASEMENT

SPECIFICATION REFERENCE

STANDARD PLATE NO.

2100A

1 OF 1

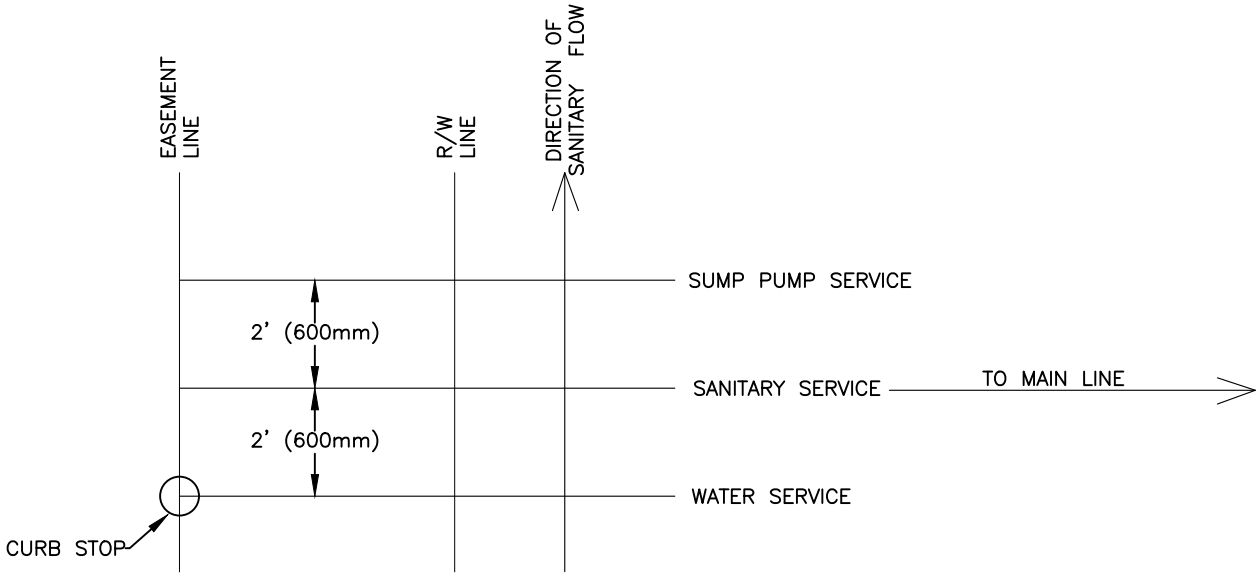

STANDARD END SERVICE LOCATIONS
TOP PLAN VIEW

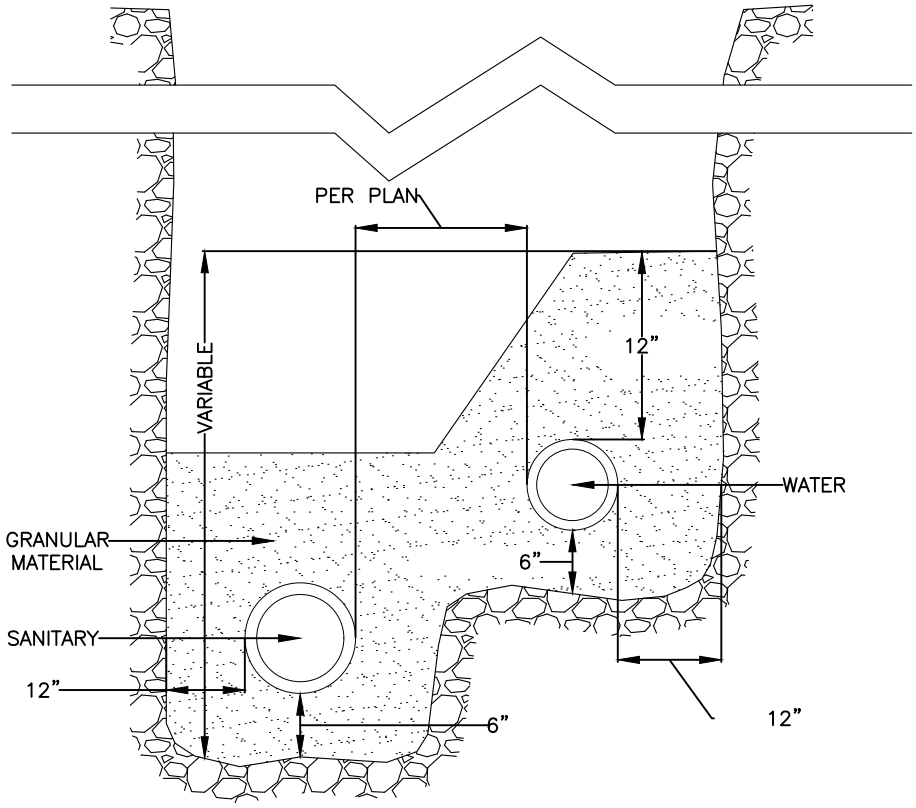

SECTION VIEW

NOTE:
1. GRANULAR MATERIAL IN THIS ZONE SHALL BE INCIDENTAL TO PIPE INSTALLATION.
2. IF THE SANITARY SEWER LOCATION IS ABOVE THE WATERMAIN, THE SANITARY SEWER PIPE MATERIAL SHALL BE WATERMAIN SPECIFICATION CLASS 160 SDR 26/35 PRESSURE PIPE.
3. WATER SERVICE WILL ALWAYS BE UP STREAM FROM OTHER SERVICES.
4. SANITARY, WATER AND SUMP PUMP SERVICE STUBS SHALL BE CONSTRUCTED TO THE EASEMENT LINE ON NEW CONSTRUCTION AND TO THE RIGHT OF WAY LINE ON RECONSTRUCTS.

APPROVED Michael J McCarty Digitally signed by Michael J McCarty Date: 2022.10.28 12:14:13-05'00' CITY ENGINEER	CITY OF MANKATO ENGINEERING DETAIL OF SANITARY & WATER IN THE SAME TRENCH	SPECIFICATION REFERENCE	STANDARD PLATE NO. **2101B** 1 OF 1

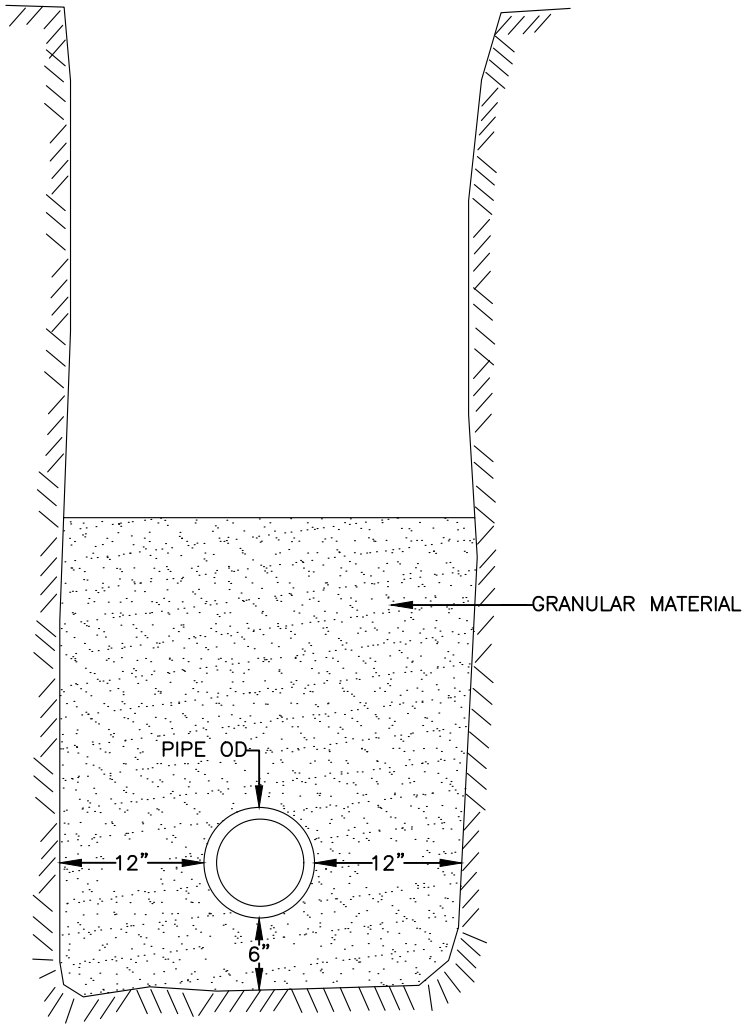

APPROVED

Michael J McCarty

Digitally signed by Michael J McCarty
Date: 2022.10.28 12:14:16-05'00'

CITY ENGINEER

CITY OF MANKATO
ENGINEERING

LIMITS OF TRENCH ROCK EXCAVATION

SPECIFICATION REFERENCE

STANDARD PLATE NO.

2102A

1 OF 1

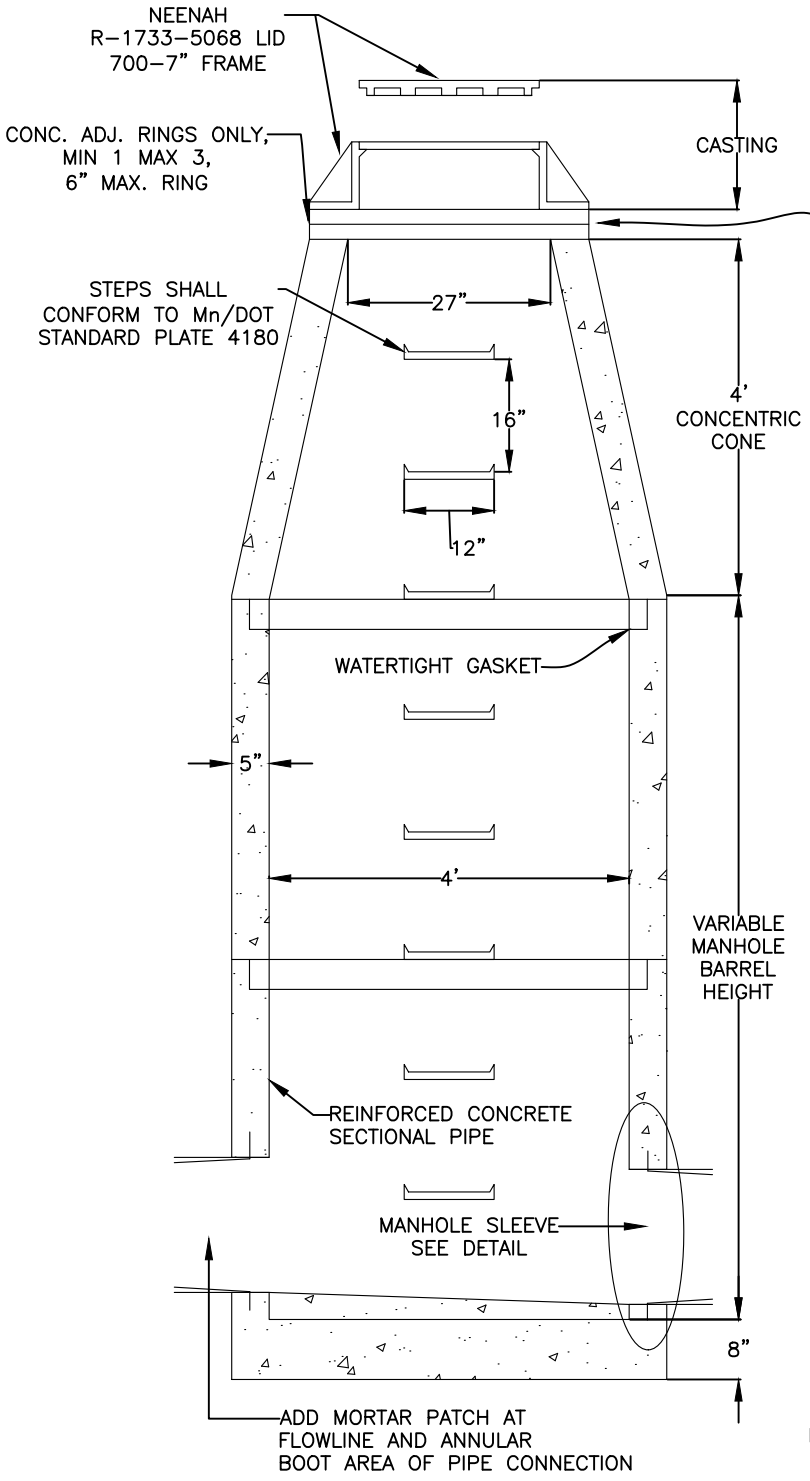

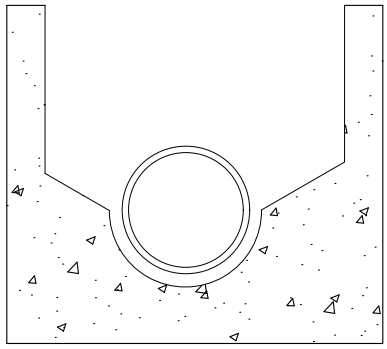

MANHOLE WITH CAST INPLACE INVERT

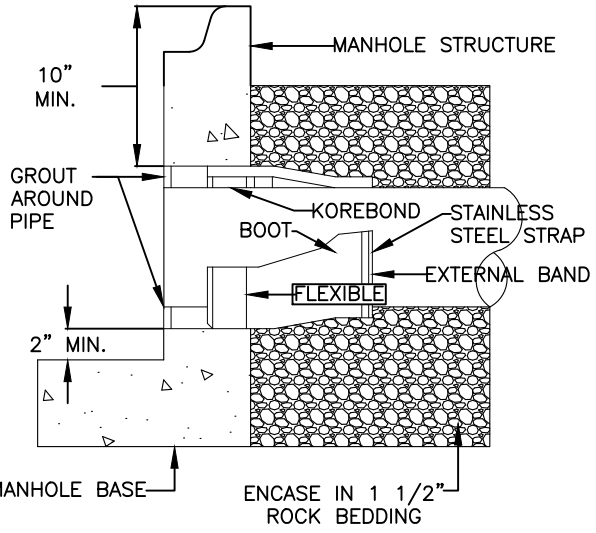

MANHOLE SLEEVE DETAIL

NOTE:
1. ALL CASTINGS SHALL HAVE A SOLID COVER WITH CONCEALED LIFT HOLES AND SELF SEALING FEATURE.
2. ON PIPES 12" OR LESS CAST INVERT TO MATCH PIPE FLOWLINE WITH INVERT DIMENSIONS ONE PIPE SIZE LARGER THAN INCOMING PIPE.

APPROVED	CITY OF MANKATO ENGINEERING	SPECIFICATION REFERENCE	STANDARD PLATE NO.
Michael J McCarty Digitally signed by Michael J McCarty Date: 2022.10.28 12:14:18-05'00' CITY ENGINEER	SANITARY SEWER MANHOLE		**2200A** 1 OF 1

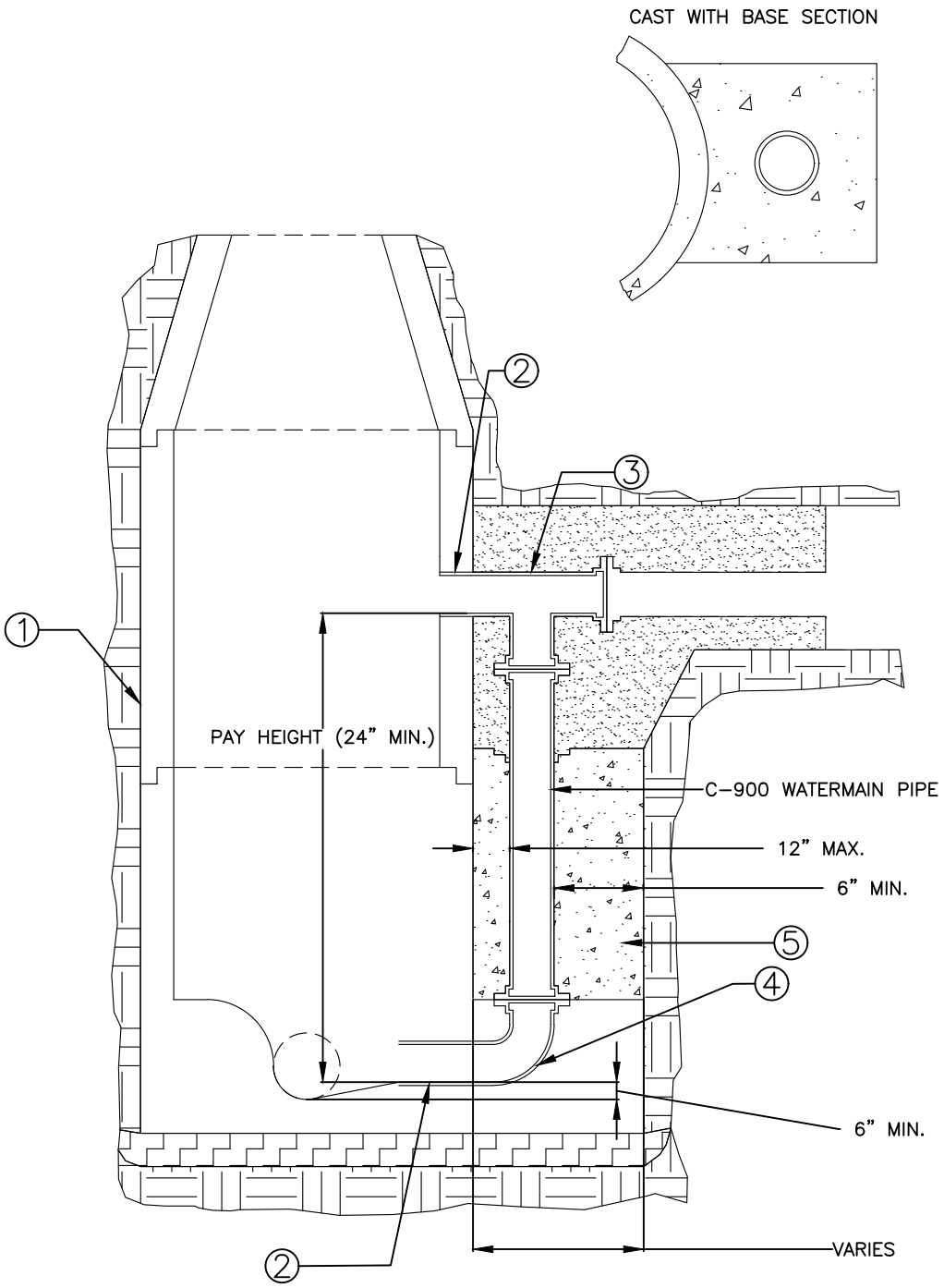

NOTES:

1. CONE SECTION, BARREL SECTIONS, AND MANHOLE BASE.
2. EXISTING MANHOLES SHALL BE CORED AND HAVE ELASTOMERIC BOOTS AND STRAPS INSTALLED (INCIDENTAL). NEW MANHOLES SHALL COME SUPPLIED WITH ELASTOMERIC BOOTS AND STAINLESS STEEL STRAPS.
3. TEE SHALL BE AWWA C153 FITTINGS DUCTILE IRON FITTINGS.
4. 90° BEND SHALL BE AWWA C153 FITTINGS DUCTILE IRON FITTINGS AND BE MONOLITHICALLY CAST WITH NEW MANHOLE BASE.
5. HORSESHOE SHAPED CONCRETE BLOCK WITH ALL VOIDS COMPLETELY FILLED WITH CONCRETE OR FORMED AND POURED CONCRETE UP TO TEE.
6. ALL DUCTILE IRON FITTINGS SHALL BE COATED WITH A SEWER RESISTANT EPOXY COATING.

APPROVED	CITY OF MANKATO ENGINEERING	SPECIFICATION REFERENCE	STANDARD PLATE NO.
Michael J McCarty Digitally signed by Michael J McCarty Date: 2022.10.28 12:14:22-05'00' CITY ENGINEER	SANITARY SEWER OUTSIDE DROP MANHOLE		**2201C** 1 OF 1

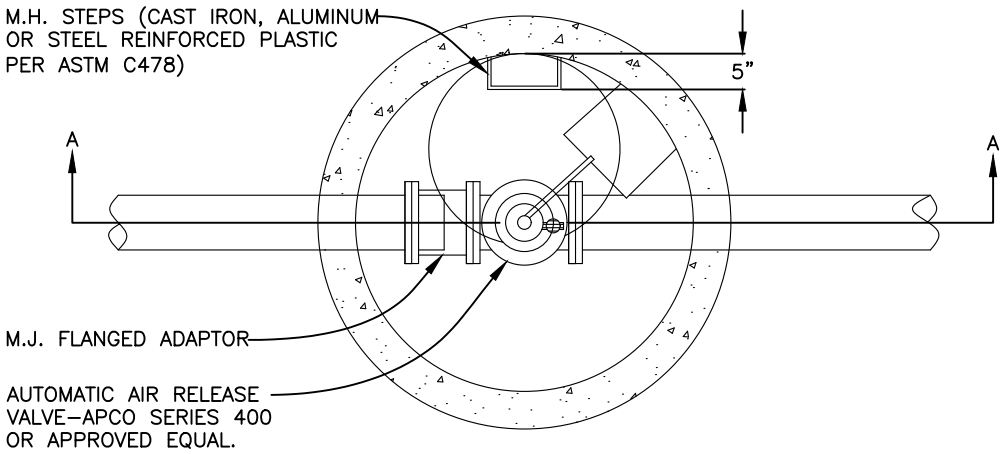

PLAN VIEW

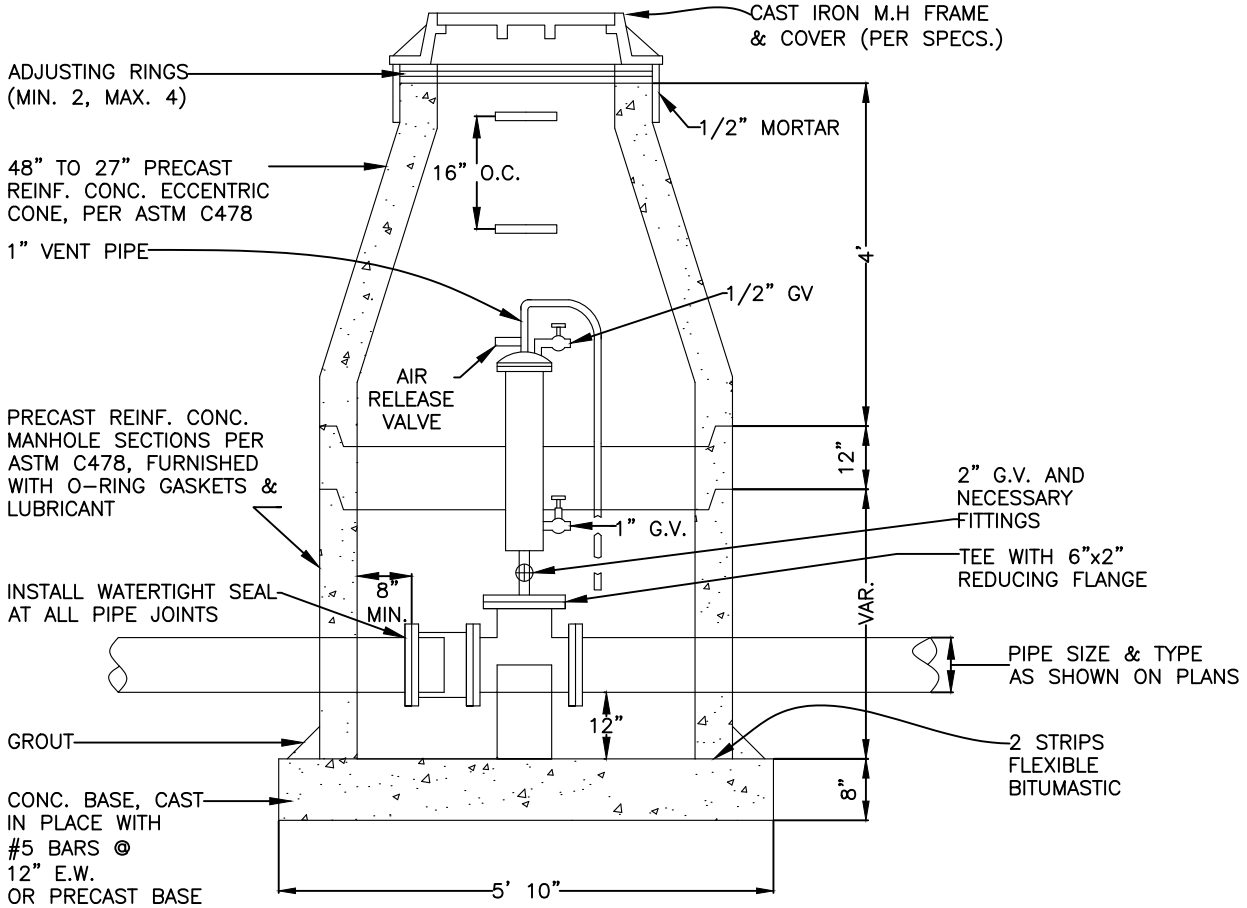

APPROVED _____

Digitally signed by Michael J McCarty
Date: 2022.10.28 12:14:25-05'00'

Michael J McCarty

_____

CITY ENGINEER

CITY OF MANKATO
ENGINEERING

AIR RELEASE MANHOLE (FOR SANITARY FORCEMAINS)

SPECIFICATION REFERENCE

STANDARD PLATE NO.

2202A

1 OF 1

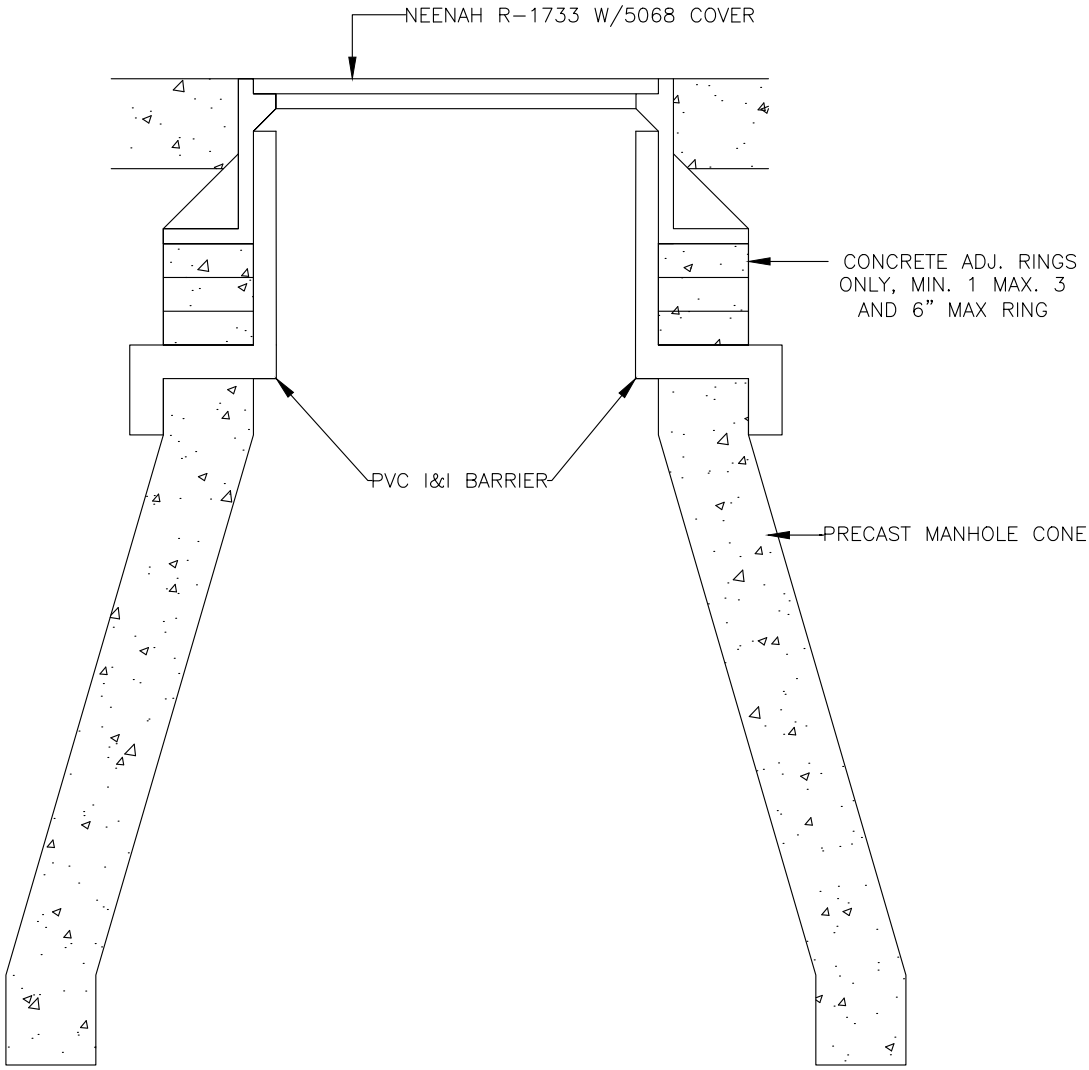

NOTE:
1. INTERIOR RUBBER CHIMNEY SEALS ARE APPROVED I&I BARRIERS ALSO.

APPROVED Michael J McCarty Digitally signed by Michael J McCarty Date: 2022.10.28 12:14:29-05'00' CITY ENGINEER	CITY OF MANKATO ENGINEERING PVC I&I BARRIER	SPECIFICATION REFERENCE	STANDARD PLATE NO. **2203A** 1 OF 1

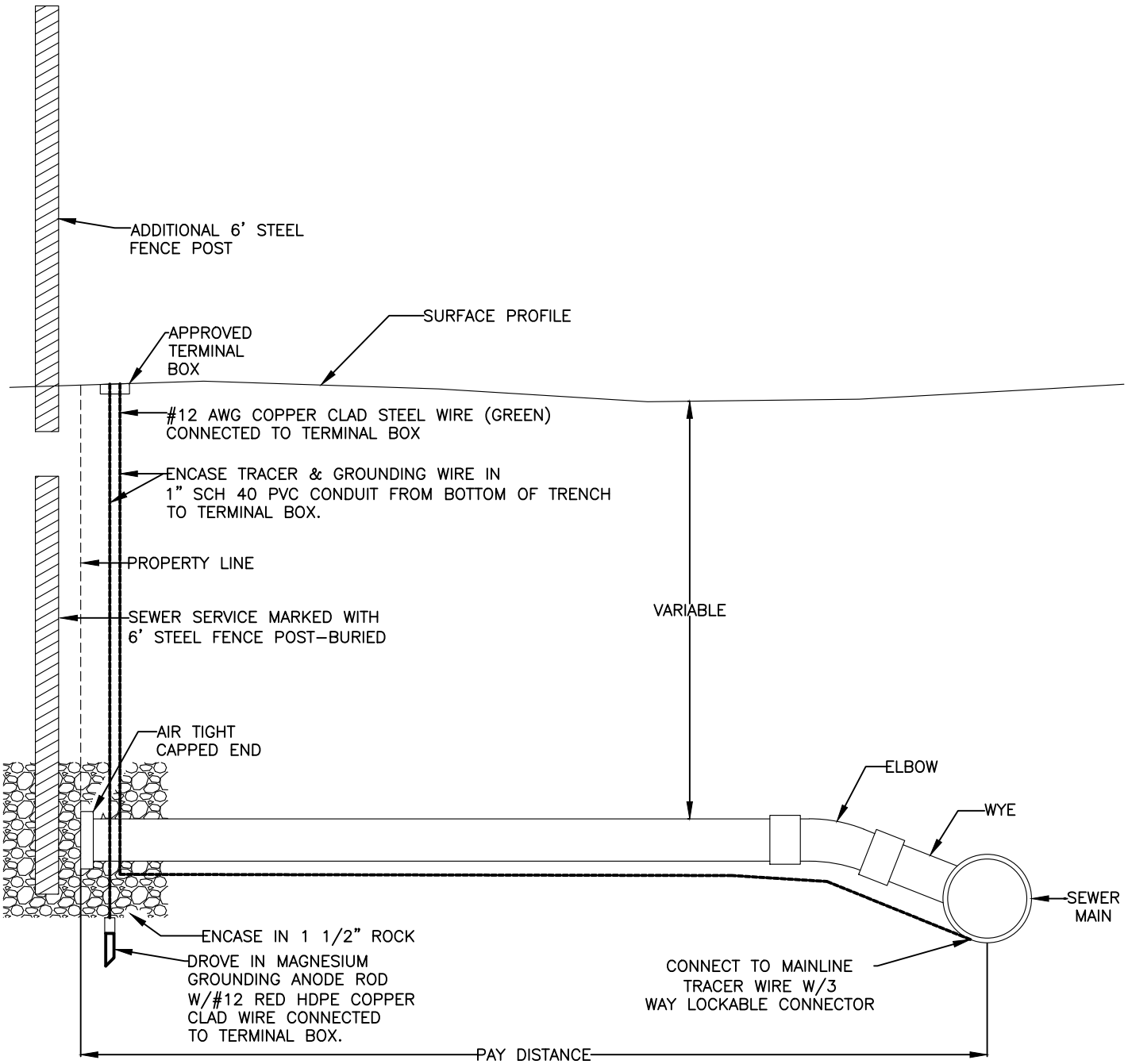

NOTE:
WHEN CONNECTING TO EXISTING SERVICES OF A DIFFERENT SIZE AN ECCENTRIC PVC ADAPTOR OR APPROVED EQUAL MUST BE USED.

APPROVED	CITY OF MANKATO ENGINEERING	SPECIFICATION REFERENCE	STANDARD PLATE NO.
Michael J McCarty Digitally signed by Michael J McCarty Date: 2022.10.28 12:14:32-05'00' CITY ENGINEER	STANDARD SANITARY SERVICE		**2240A** 1 OF 1

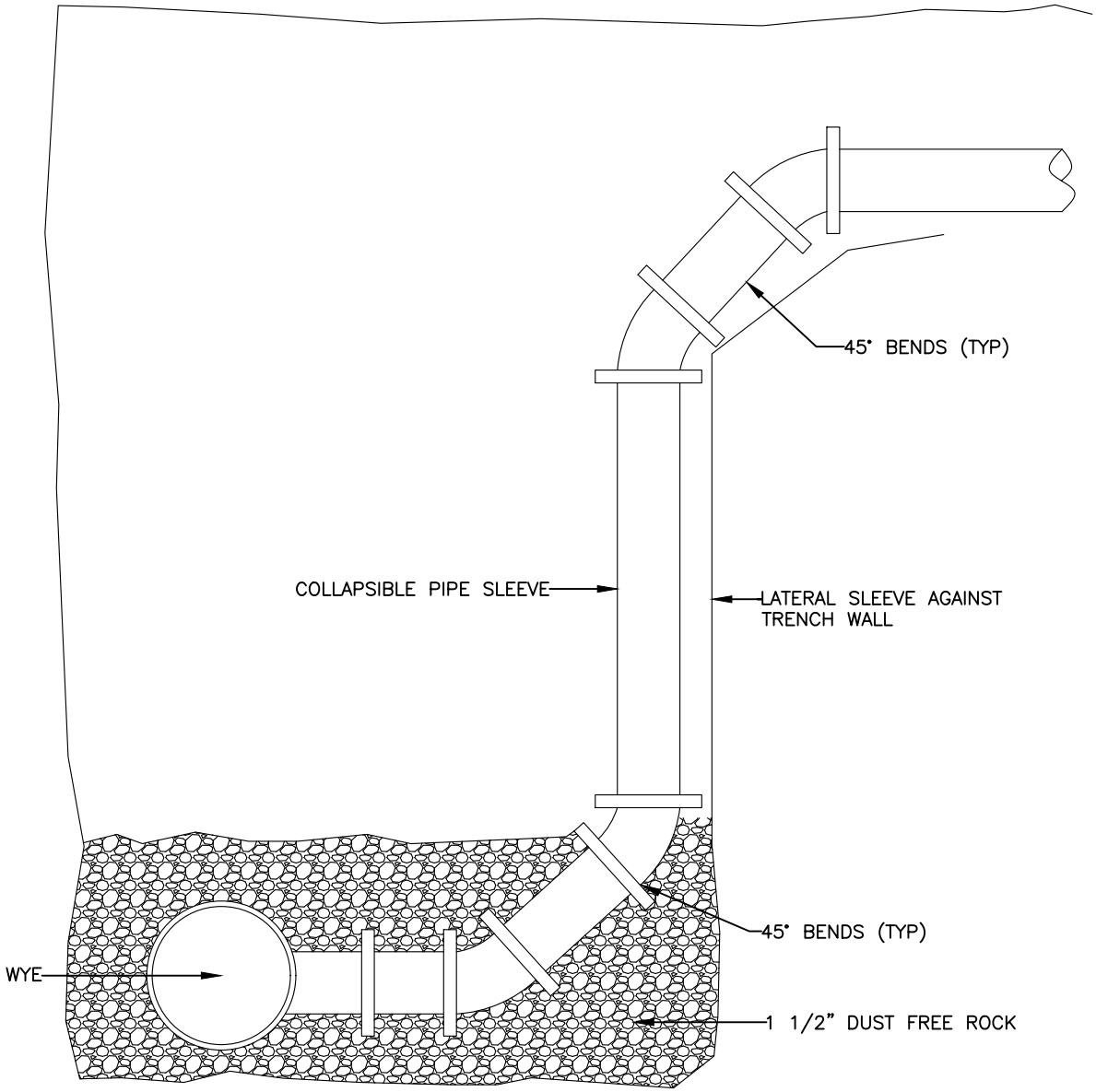

NOTE:
CRUSHABLE SLEEVE SHALL BE USED WHEN VERTICAL RISER EXCEEDS 10'

APPROVED Michael J McCarty Digitally signed by Michael J McCarty Date: 2022.10.28 12:14:36-05'00' CITY ENGINEER	CITY OF MANKATO ENGINEERING DEEP SANITARY SERVICE DETAIL	SPECIFICATION REFERENCE	STANDARD PLATE NO. **2241A** 1 OF 1

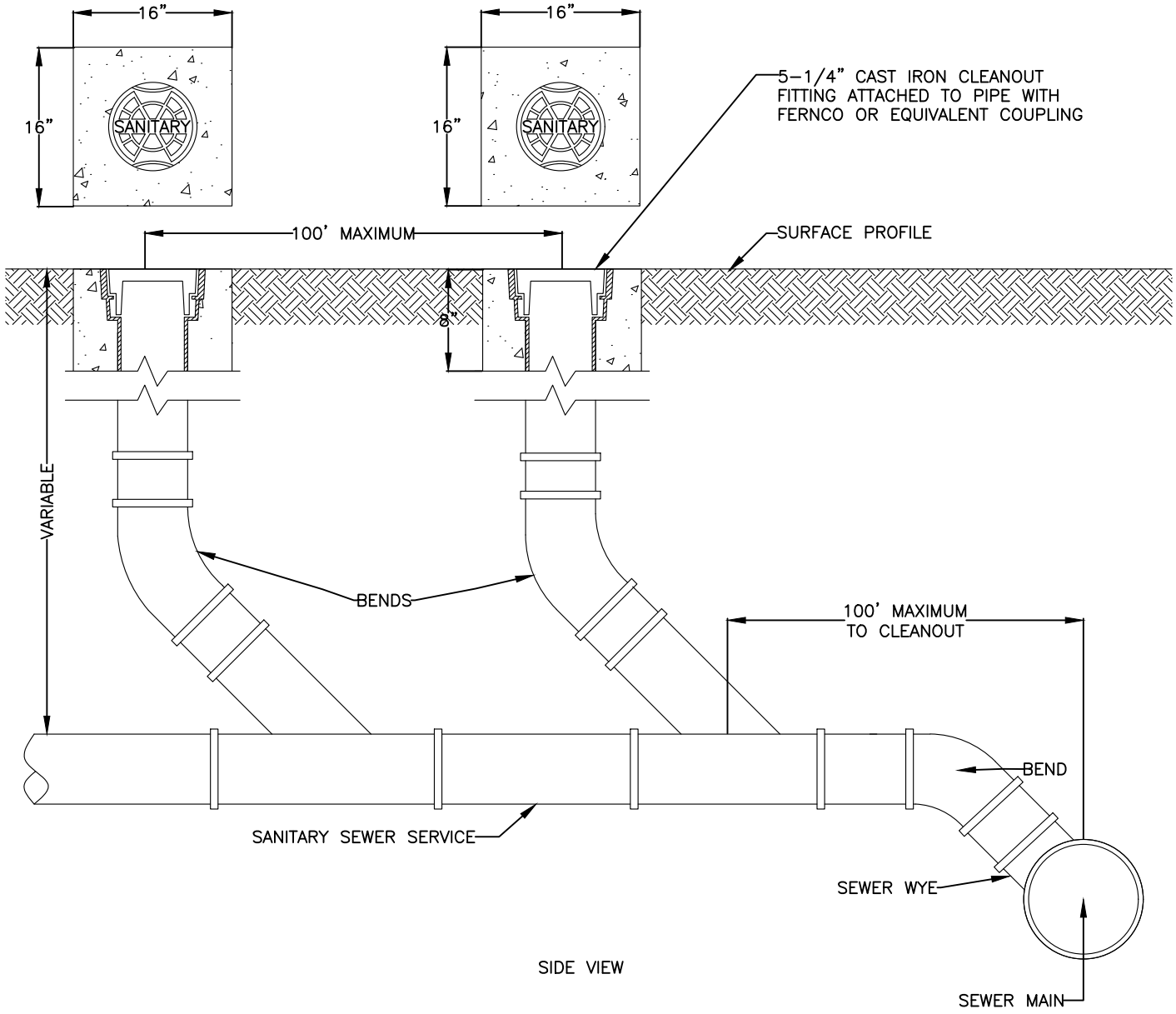

NOTE:
CLEANOUT IS TO BE WITHIN EASEMENT AREA BUT OUT OF DRIVING SURFACE, GRANULAR MATERIAL TO BE PLACED AROUND ALL PIPE.

APPROVED Michael J McCarty Digitally signed by Michael J McCarty Date: 2022.10.28 12:14:38-05'00' CITY ENGINEER	CITY OF MANKATO ENGINEERING SANITARY SERVICE CLEANOUT	SPECIFICATION REFERENCE	STANDARD PLATE NO. **2242A** 1 OF 1

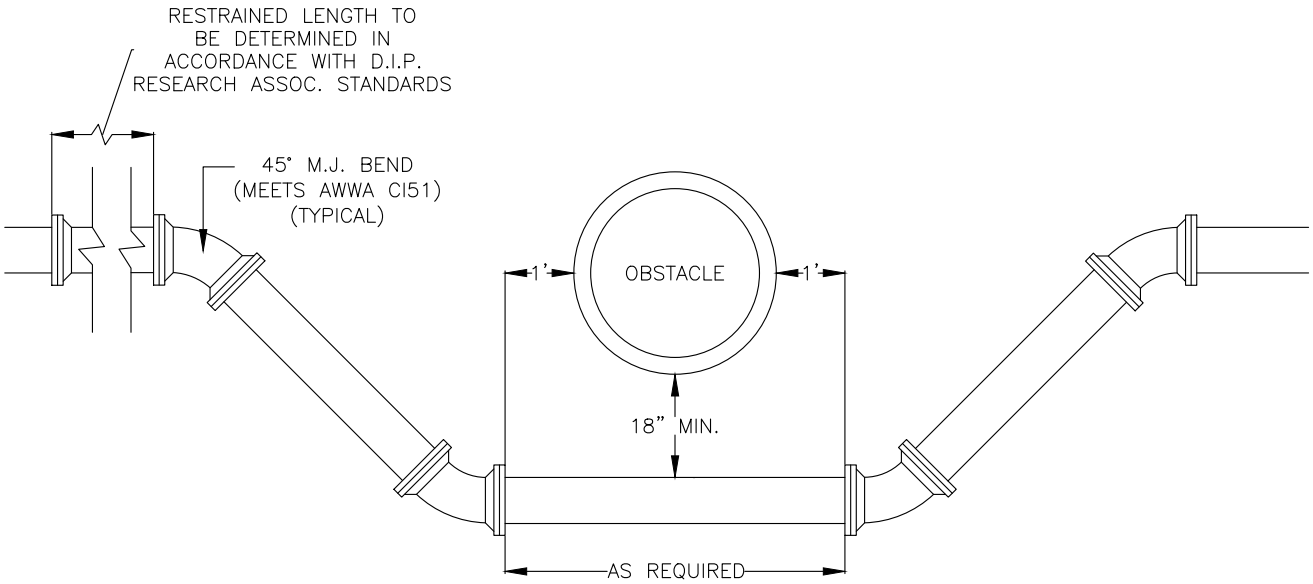

NOTES:
1. FITTINGS SHALL BE RESTRAINED WITH THE USE OF APPROVED MECHANICAL JOINT RESTRAINING GLANDS.
2. FITTINGS AND GLANDS SHALL BE EPOXY COATED, FLUORCARBON COATED BOLTS SHALL BE BLUE WITH TWO ZINC ANODES ATTACHED PER GLAND.

APPROVED _____ Michael J McCarty Digitally signed by Michael J McCarty Date: 2022.10.28 12:14:41-05'00' _____ CITY ENGINEER	CITY OF MANKATO ENGINEERING WATERMAIN CONSTRUCTION AROUND OBSTACLES	SPECIFICATION REFERENCE	STANDARD PLATE NO. **2320A** 1 OF 1

1/2" RUBBER GASKET
INSTALLED BETWEEN THE GATE
VALVE AND GATE VALVE ADAPTOR.
GATE VALVE ADAPTOR 1/4"
STEEL WITH PROTECTIVE COATING.

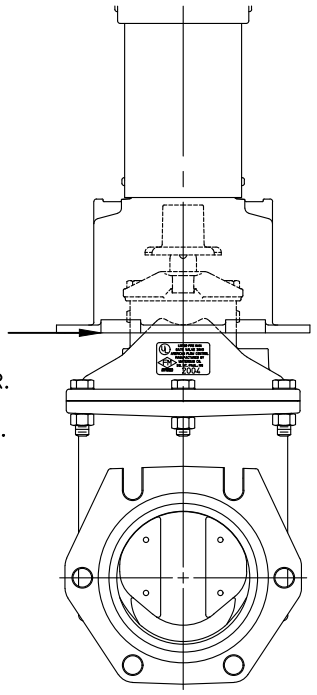

SECTION VIEW

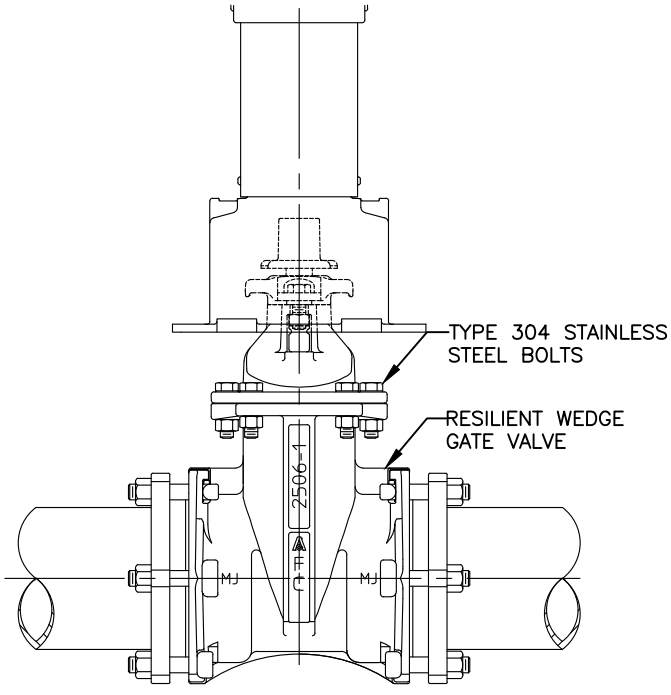

SIDE VIEW

APPROVED _____

Michael J McCarty

Digitally signed by Michael J McCarty
Date: 2022.10.28 12:14:43-05'00'

_____
CITY ENGINEER

CITY OF MANKATO
ENGINEERING

GATE VALVE ADAPTOR

SPECIFICATION REFERENCE

STANDARD PLATE NO.

2321A

1 OF 1

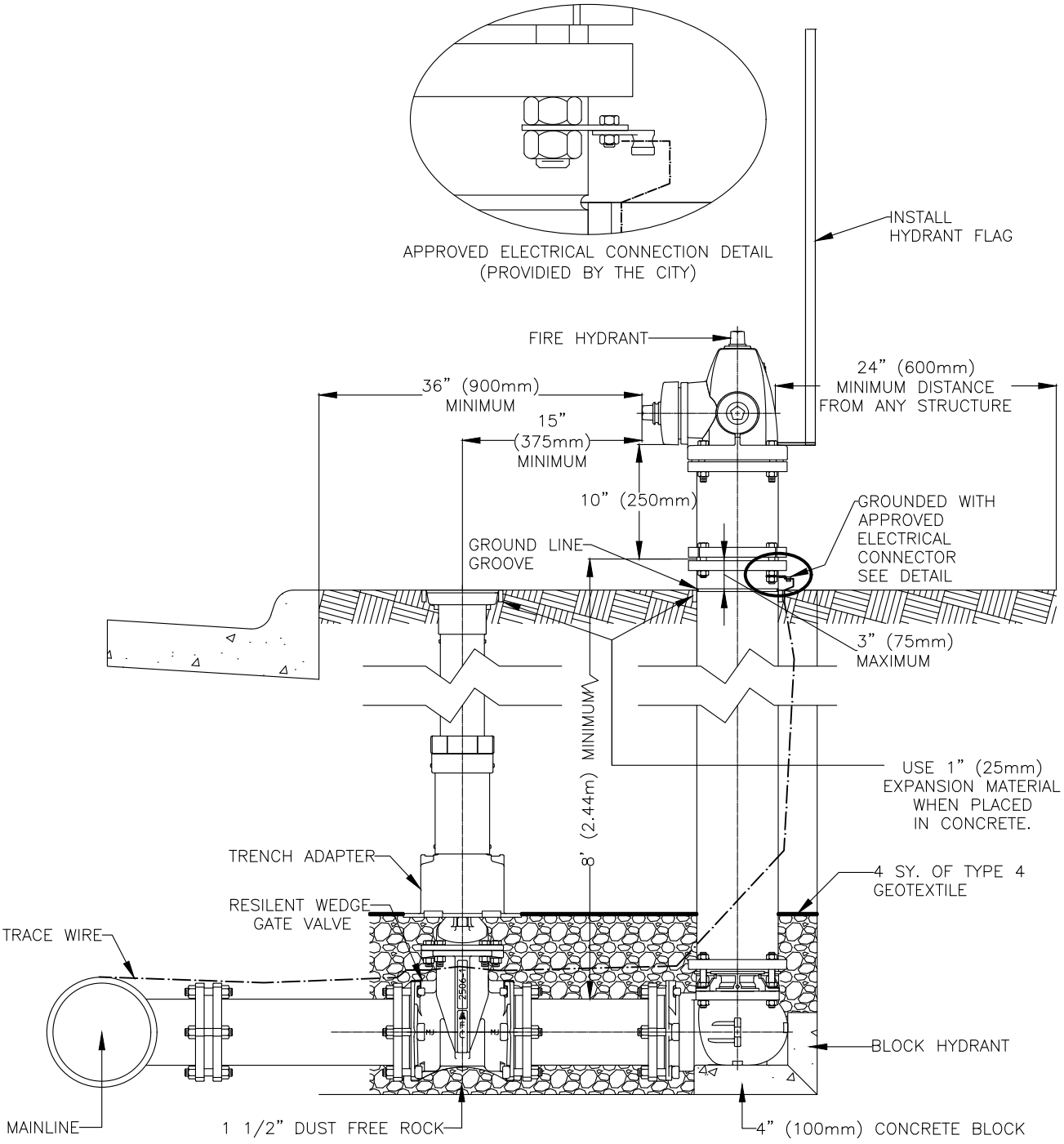

NOTES:

1. WHEN PVC WATERMAIN IS USED; THE TRACE WIRE SHALL BE EXTENDED AND ATTACHED TO THE FLANGE OF THE HYDRANT WITH APPROVED ELECTRICAL CONNECTOR.
2. VALVE SHALL BE TIED INDEPENDENTLY TO MAIN LINE AND HYDRANT SHALL BE TIED INDEPENDENTLY TO VALVE USING APPROVED MECHANICAL JOINT RESTRAINING GLANDS.
3. 5 1/4" x 8'(133mm x 2.4m) HYDRANT SHALL BE: WATEROUS WB67 MODEL, MODIFIED KENNEDY GUARDIAN OR APPROVED EQUAL.
4. HYDRANT BREAK OFF 0.33' TO 0.5' ABOVE TOP BACK OF CURB.
5. HYDRANT FLAG: ORANGE 48 INCH FLEXSTAKE MARKERS.

APPROVED Michael J McCarty Digitally signed by Michael J McCarty Date: 2022.10.28 12:14:45-05'00' CITY ENGINEER	CITY OF MANKATO ENGINEERING HYDRANT DETAIL	SPECIFICATION REFERENCE	STANDARD PLATE NO. **2322A** 1 OF 1

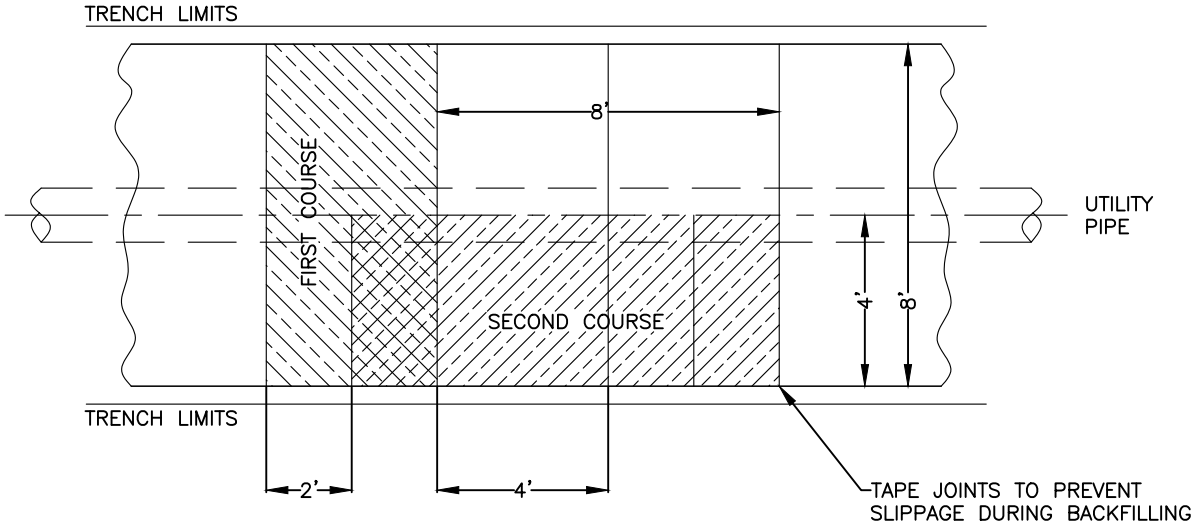

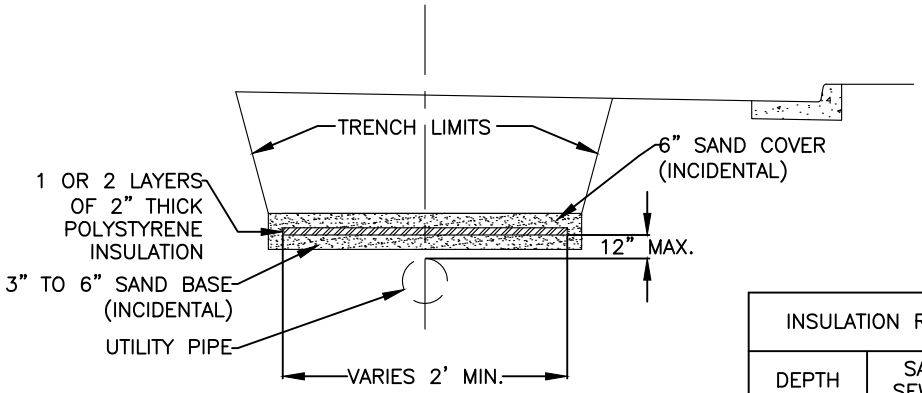

TYPICAL LAYOUT FOR POLYSTYRENE INSULATION

INSULATION REQUIREMENTS		
DEPTH	SAN. SEWER	WATER–MAIN
5'	4"	4"
5'–7'	2"	2"
>7'	0	0

NOTES:
1. INSULATION BOARD SHALL BE AS PER MN/DOT SPEC. 3760.
2. FOR WATERMAIN WITH NO SERVICE CONNECTIONS OR FOR WATERMAIN OUTSIDE OF PAVED AREAS WHERE SNOW IS NOT REMOVED, NO INSULATION IS REQUIRED IF COVER IS AT LEAST 6'.
3. INSULATION BOARD SHALL BE PAID FOR AS 2503.604 2" OR 4" INSULATION WHERE APPLICABLE AT THE PRICE BID PER SQ. YD.
4. DEPTH FOR SANITARY AND STORM SHALL BE TO INVERT. DEPTH FOR WATERMAIN SHALL BE TO THE TOP OF THE PIPE.

APPROVED	CITY OF MANKATO ENGINEERING	SPECIFICATION REFERENCE	STANDARD PLATE NO.
Michael J McCarty Digitally signed by Michael J McCarty Date: 2022.10.28 12:14:47-05'00' CITY ENGINEER	POLYSTYRENE INSULATION		**2323A** 1 OF 1

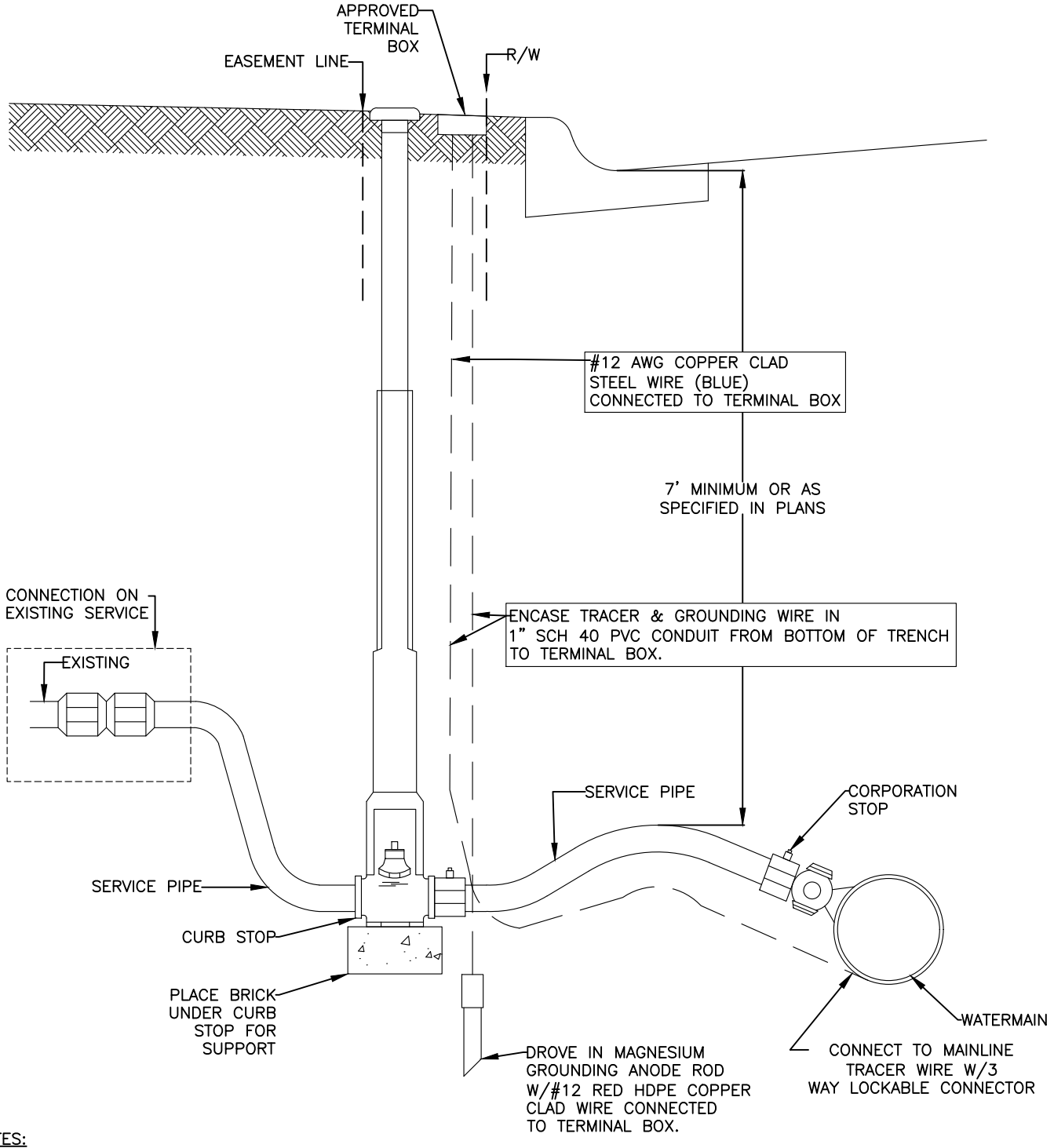

NOTES:
1. SANITARY, WATER AND STORM DRAIN SERVICE STUB SHALL BE CONSTRUCTED TO THE RIGHT-OF-WAY LINE.

APPROVED	CITY OF MANKATO ENGINEERING	SPECIFICATION REFERENCE	STANDARD PLATE NO.
Michael J McCarty Digitally signed by Michael J McCarty Date: 2022.10.28 12:14:50-05'00' CITY ENGINEER	WATER SERVICE		**2340B** 1 OF 1

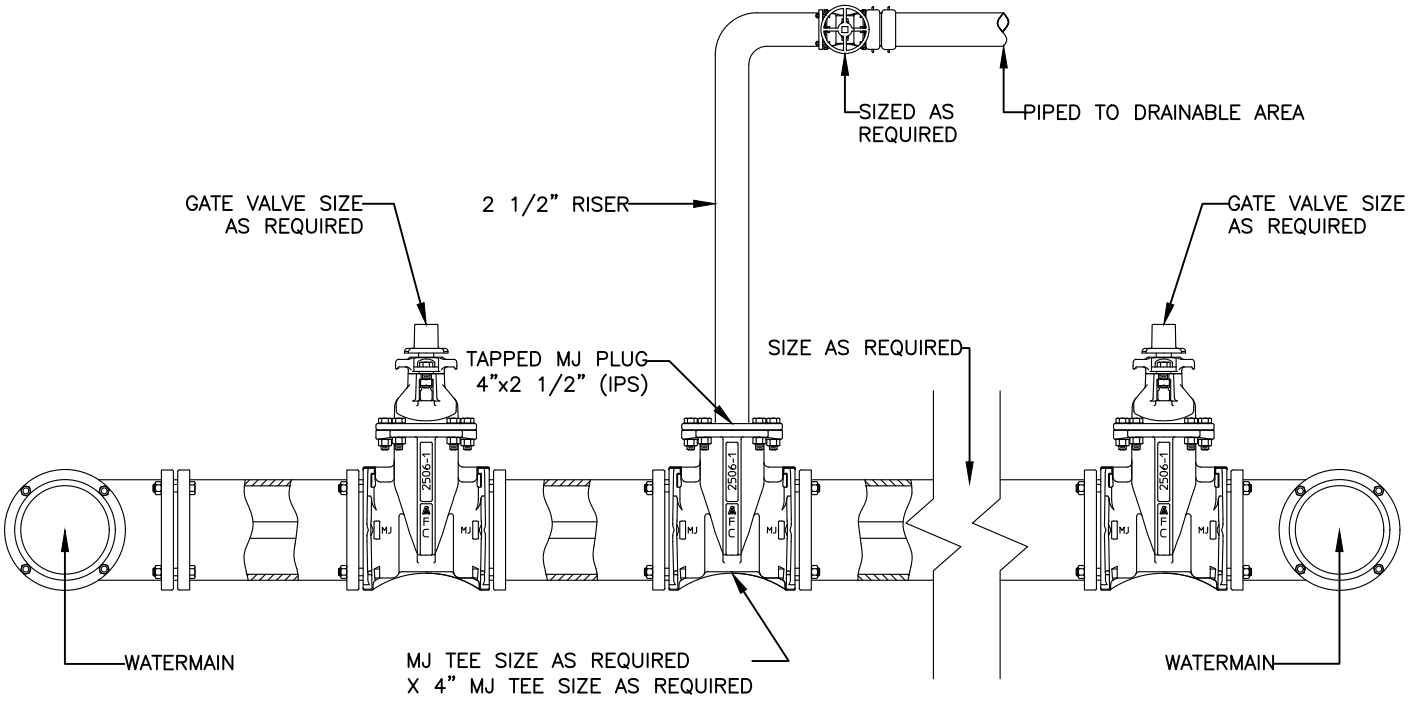

NOTES:
INSTALL WATER FLUSHING PORT ON HIGH END OF WATER SYSTEM NO MORE THAN 4 FEET FROM VALVE. AFTER FLUSHING AND TESTING IS COMPLETE REMOVE RISER PIPE AND INSTALL 4" MJ PLUG OR 2" BRASS PLUG.

APPROVED Michael J McCarty Digitally signed by Michael J McCarty Date: 2022.10.28 12:14:52-05'00' CITY ENGINEER	CITY OF MANKATO ENGINEERING WATER FLUSHING PORT	SPECIFICATION REFERENCE	STANDARD PLATE NO. **2360A** 1 OF 1

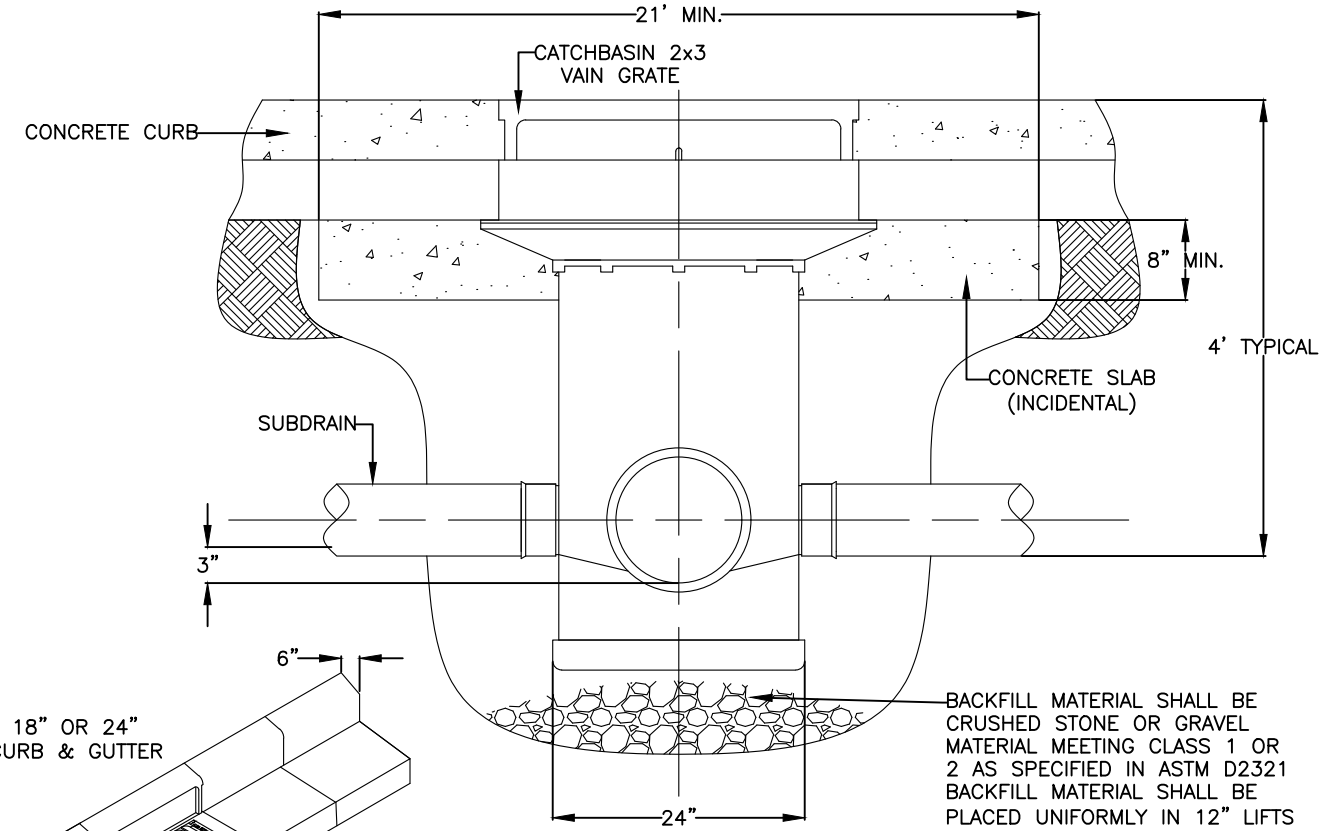

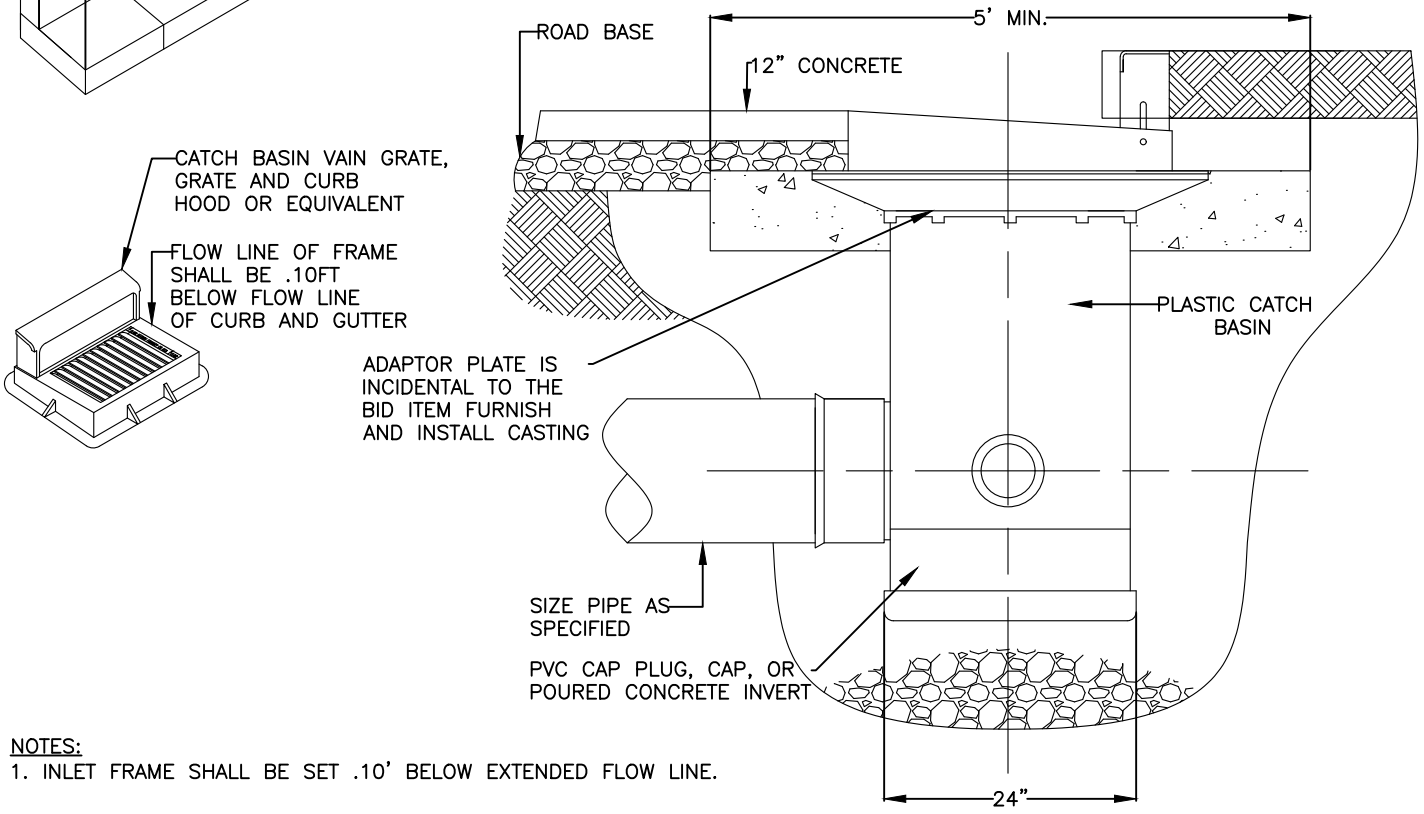

NOTES:

1. INLET FRAME SHALL BE SET .10' BELOW EXTENDED FLOW LINE.

APPROVED Michael J McCarty Digitally signed by Michael J McCarty Date: 2022.10.28 12:14:54-05'00' CITY ENGINEER	CITY OF MANKATO ENGINEERING MANKATO STD. CATCH BASIN NUMBER 3	SPECIFICATION REFERENCE	STANDARD PLATE NO. **2402C** 1 OF 1

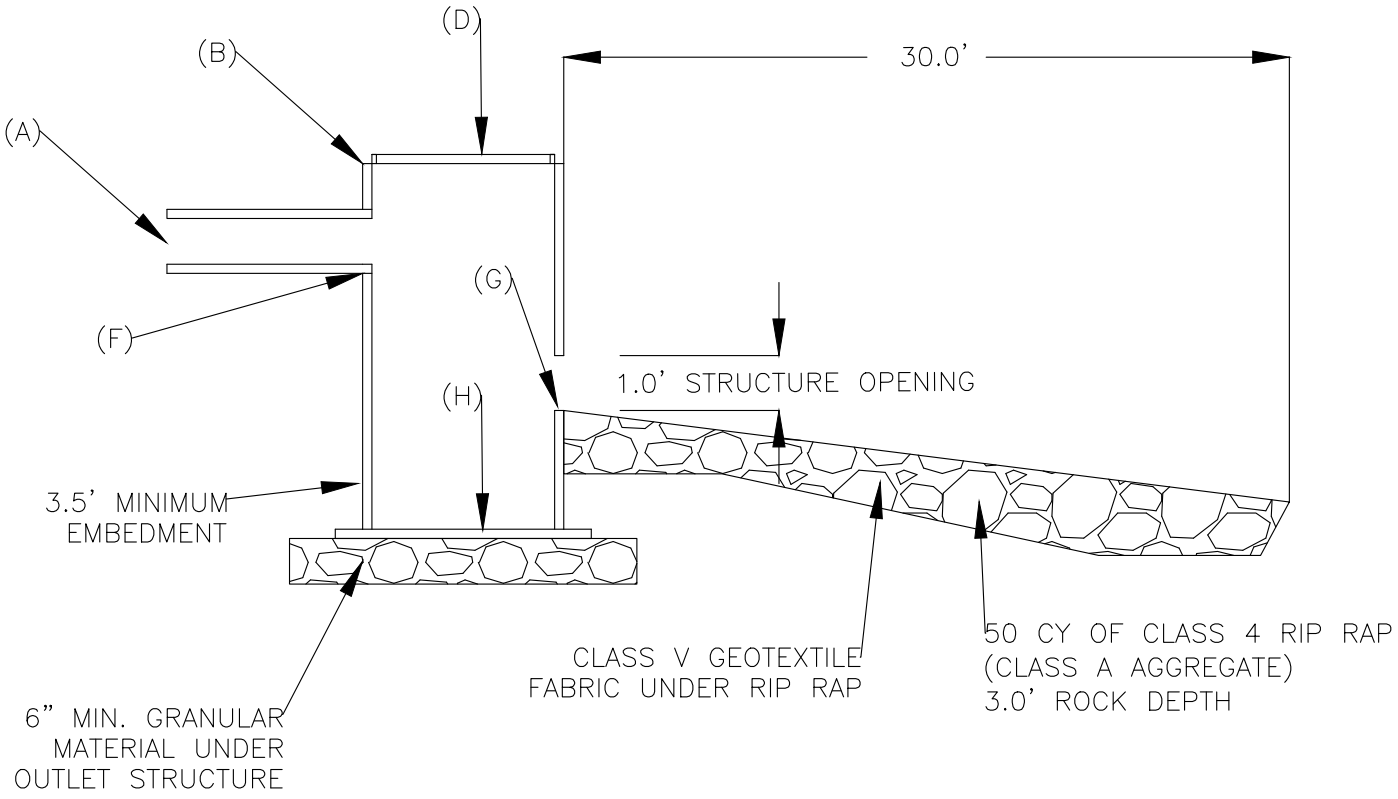

VELOCITY REDUCING OUTLET - SPECIFICATIONS							
(A) INLET PIPE	(B) MN/DOT STRUCTURE	(C)OUTLET WIDTH	(D) MN/DOT RING AND COVER	(E) RIM ELEVATION	(F) INLET PIPE ELEVATION	(G) OUTLET ELEVATION	(H) SUMP ELEVATION
12.0"	4020-48	4.0'	SEE PLAN	SEE PLAN	SEE PLAN	SEE PLAN	SEE PLAN
18.0"	4020-48	4.0'	SEE PLAN	SEE PLAN	SEE PLAN	SEE PLAN	SEE PLAN
21.0"	4020-48	4.0'	SEE PLAN	SEE PLAN	SEE PLAN	SEE PLAN	SEE PLAN
24.0"	4020-48	4.0'	SEE PLAN	SEE PLAN	SEE PLAN	SEE PLAN	SEE PLAN
27.0"	4020-48	4.0'	SEE PLAN	SEE PLAN	SEE PLAN	SEE PLAN	SEE PLAN
30.0"	4020-54	4.0'	SEE PLAN	SEE PLAN	SEE PLAN	SEE PLAN	SEE PLAN
33.0"	4020-60	4.0'	SEE PLAN	SEE PLAN	SEE PLAN	SEE PLAN	SEE PLAN
36.0"	4020-72	5.0'	SEE PLAN	SEE PLAN	SEE PLAN	SEE PLAN	SEE PLAN
42.0"	4020-72	5.0'	SEE PLAN	SEE PLAN	SEE PLAN	SEE PLAN	SEE PLAN
48.0"	4020-84	6.0'	SEE PLAN	SEE PLAN	SEE PLAN	SEE PLAN	SEE PLAN
54.0"	4020-96	6.0'	SEE PLAN	SEE PLAN	SEE PLAN	SEE PLAN	SEE PLAN
60.0"	4020-108	7.0'	SEE PLAN	SEE PLAN	SEE PLAN	SEE PLAN	SEE PLAN
66.0"	4020-120	8.0'	SEE PLAN	SEE PLAN	SEE PLAN	SEE PLAN	SEE PLAN
72.0"	4020-120	8.0'	SEE PLAN	SEE PLAN	SEE PLAN	SEE PLAN	SEE PLAN

APPROVED

Michael J McCarty

Digitally signed by Michael J McCarty
Date: 2022.10.28 12:14:56-05'00'

CITY ENGINEER

CITY OF MANKATO
ENGINEERING

VELOCITY REDUCING OUTLET STRUCTURE

SPECIFICATION REFERENCE

STANDARD PLATE NO.

2403A

1 OF 1

PIPE ANCHOR DETAIL

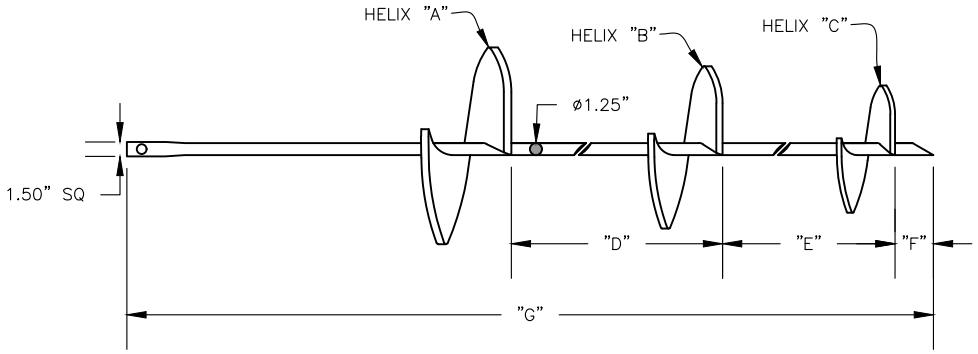

PIPE ANCHOR DIMENTIONS								
	HELIX DIAMETER			ANCHOR LENGTHS				ANCHOR OFFSET
PIPE SIZE	A	B	C	D	E	F	G	H
12"	10"	8"	6"	24"	18"	4"	92"	18"
15"	10"	8"	6"	24"	18"	4"	92"	22.5"
18"	10"	8"	6"	24"	18"	4"	92"	27"

PIPE DETAIL

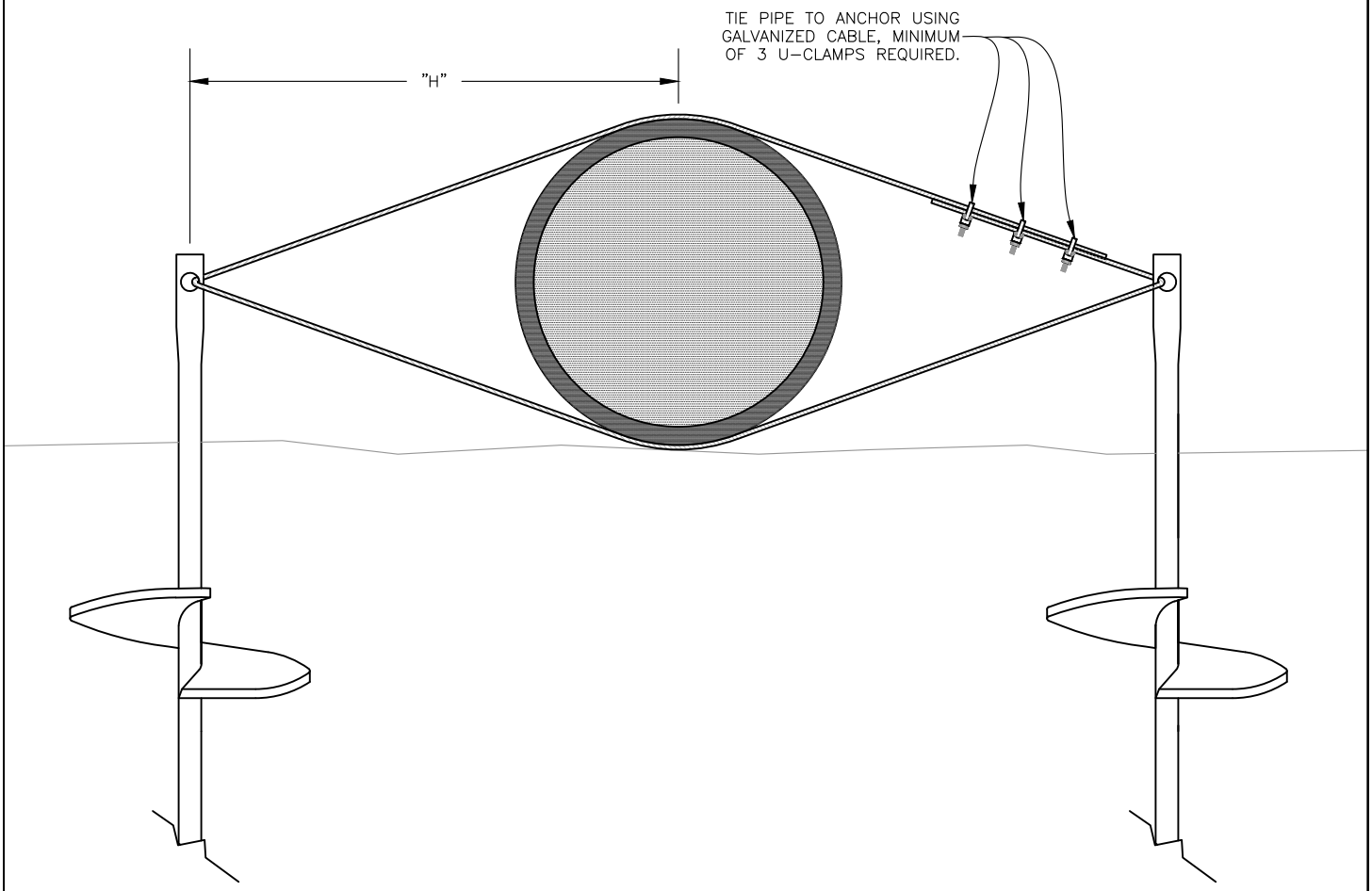

APPROVED

Michael J McCarty

Digitally signed by Michael J McCarty
Date: 2022.10.28 12:14:58-05'00'

CITY ENGINEER

CITY OF MANKATO
ENGINEERING

PIPE AND ANCHOR DETAIL

SPECIFICATION REFERENCE

STANDARD PLATE NO.

2404A

1 OF 1

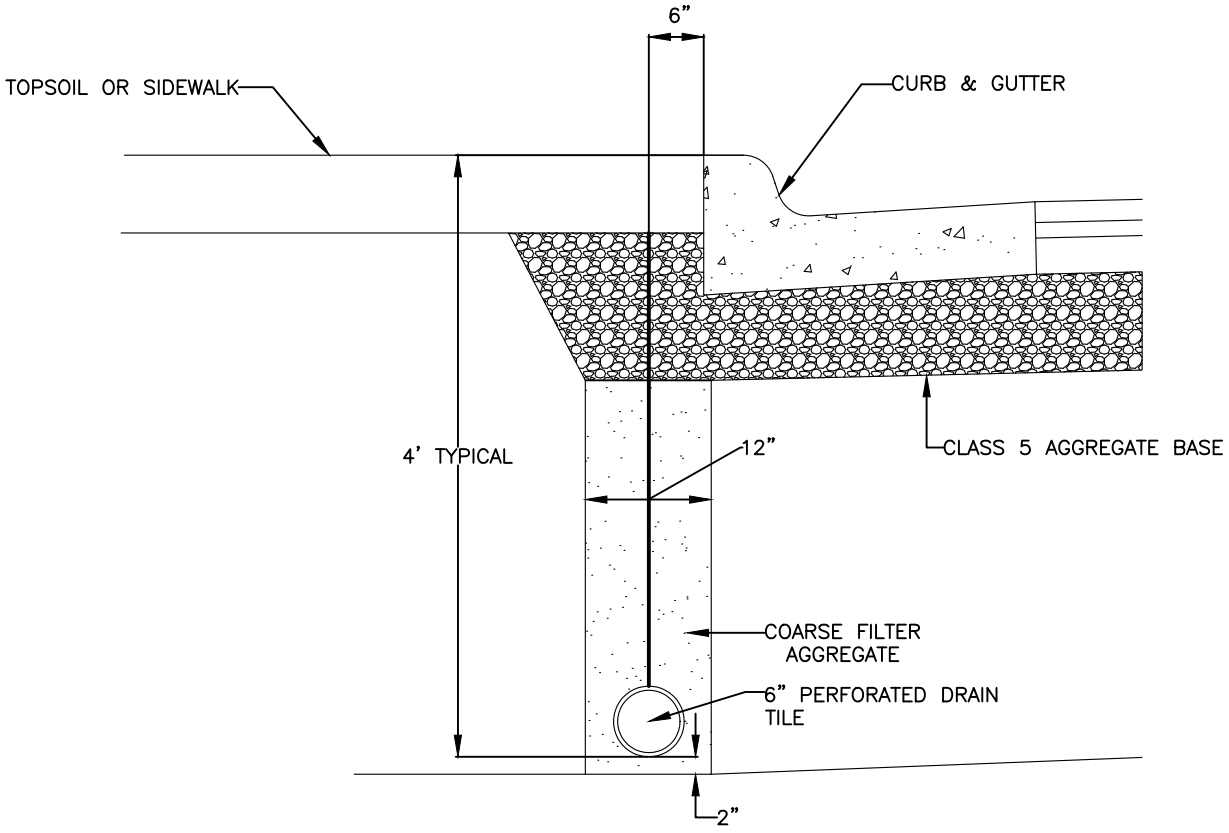

NOTE:
1. THE ROUTE OF THE DRAIN TILE MAY BE ALTERED TO AVOID DAMAGE TO TREES AS DIRECTED BY ENGINEER.

APPROVED Michael J McCarty Digitally signed by Michael J McCarty Date: 2022.10.28 12:15:00-05'00' CITY ENGINEER	CITY OF MANKATO ENGINEERING DRAIN TILE TRENCH DETAIL	SPECIFICATION REFERENCE	STANDARD PLATE NO. **2420B** 1 OF 2

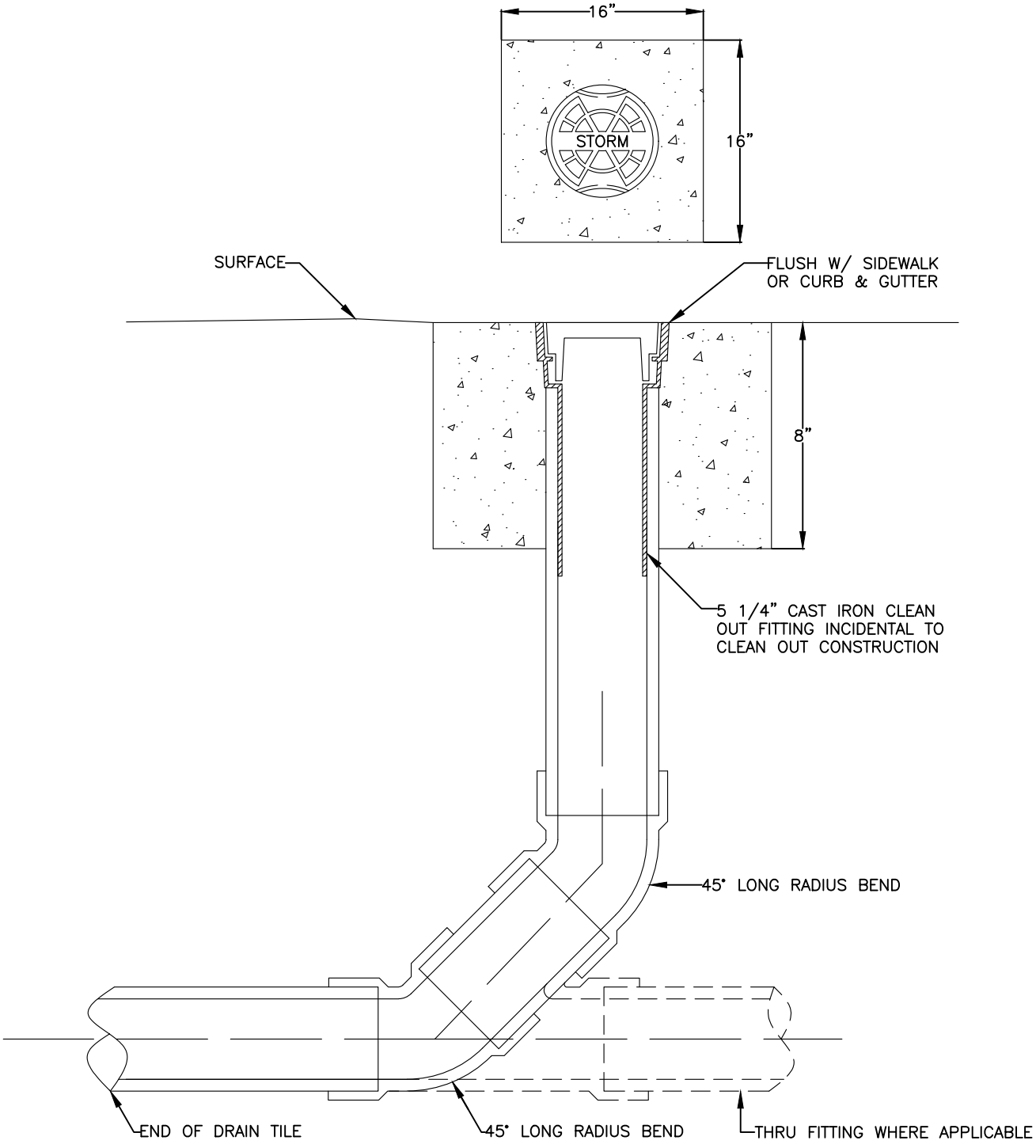

NOTE:
CLEANOUT LINE TO BE OF THE SAME DIAMETER AS DRAIN TILE AND SHALL BE TYPE PSM, PVC SEWER PIPE, SDR 35. SEE PLANS FOR SIZE.

APPROVED	CITY OF MANKATO ENGINEERING	SPECIFICATION REFERENCE	STANDARD PLATE NO.
Michael J McCarty Digitally signed by Michael J McCarty Date: 2022.10.28 12:15:02-05'00' CITY ENGINEER	DRAIN TILE CLEANOUT END/THRU BLVD CONDITION		**2421A** 1 OF 2

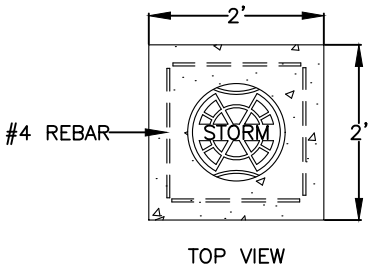

TOP VIEW

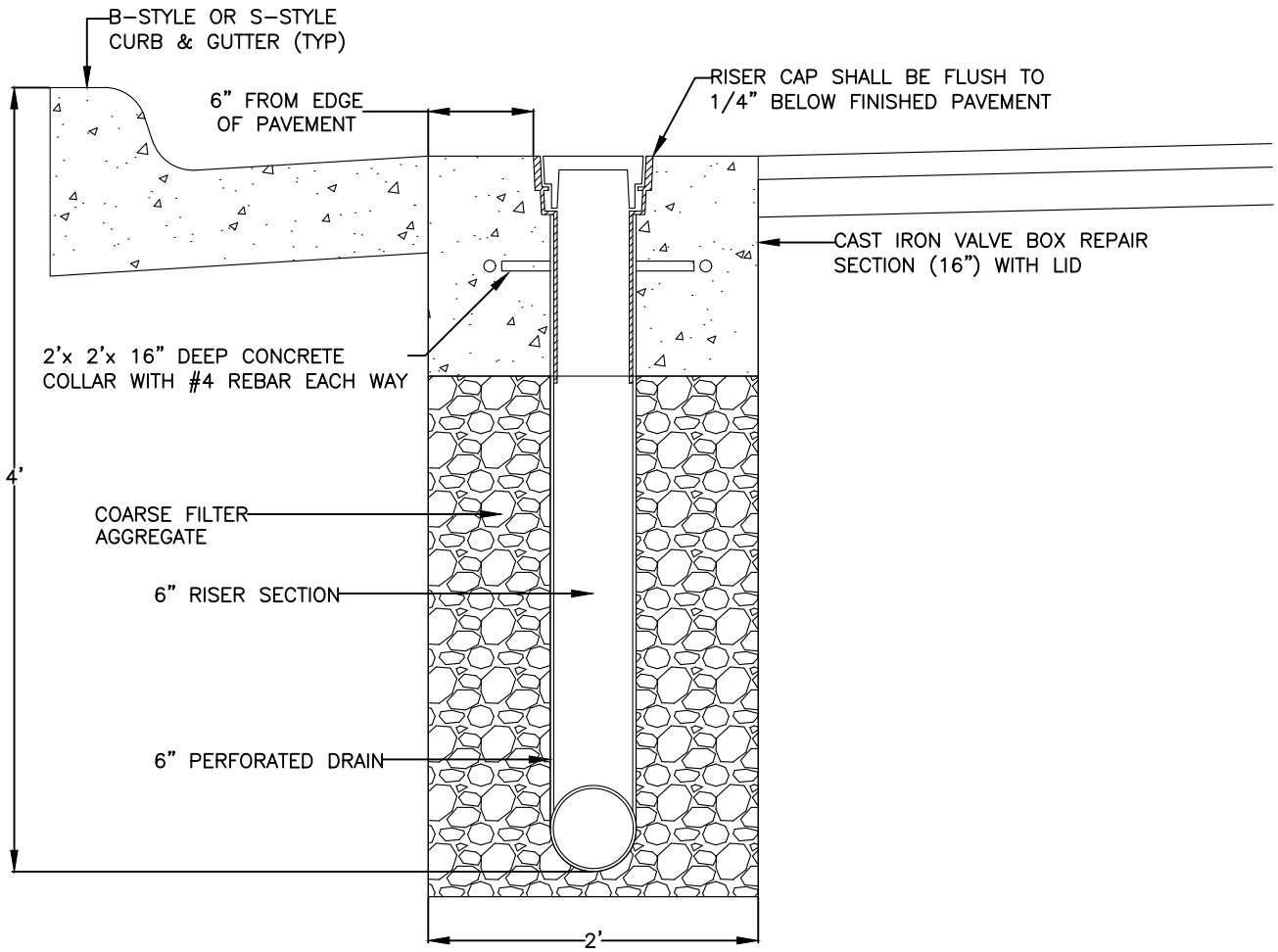

NOTES:
1. CAST IRON VALVE BOX RISER SECTION INSERTED INTO 6" PVC DRAIN PIPE.
2. LID SHALL HAVE "STORM" MARKING.

APPROVED	CITY OF MANKATO ENGINEERING	SPECIFICATION REFERENCE	STANDARD PLATE NO.
Michael J McCarty Digitally signed by Michael J McCarty Date: 2022.10.28 12:15:04-05'00' CITY ENGINEER	DRAIN TILE CLEANOUT END/THRU STREET CONDITION		**2421A** 2 OF 2

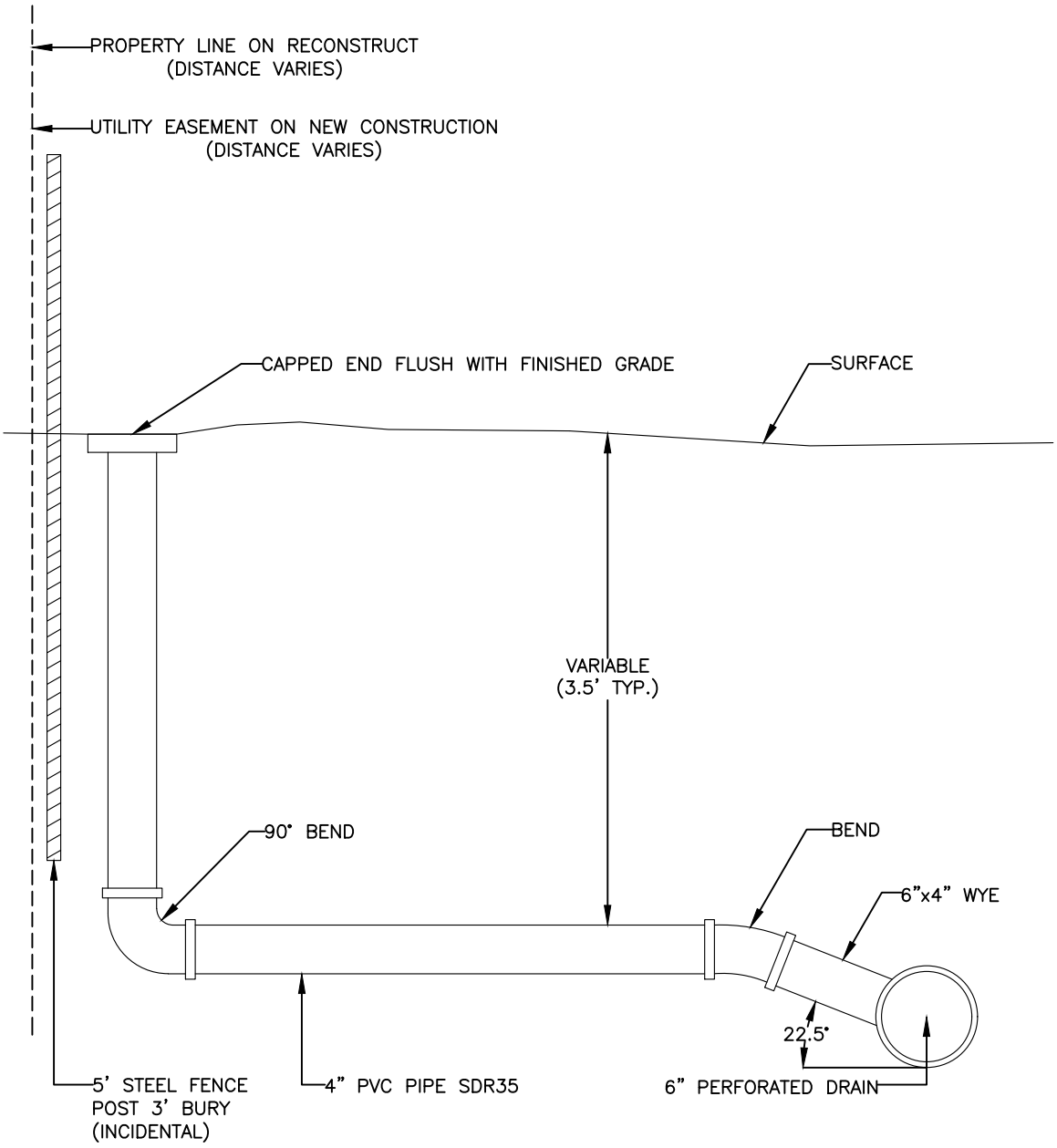

NOTE:
1. WHEN NO CONNECTION IS AVAILABLE SERVICE IS TO BE BROUGHT TO THE SURFACE AND CAPPED
2. ALL FITTINGS SHALL BE INCIDENTAL TO THE DRAIN SYSTEM

APPROVED Michael J McCarty Digitally signed by Michael J McCarty Date: 2022.10.28 12:15:05-05'00' CITY ENGINEER	CITY OF MANKATO ENGINEERING 4" DRAIN STUB	SPECIFICATION REFERENCE	STANDARD PLATE NO. **2440A** 1 OF 2

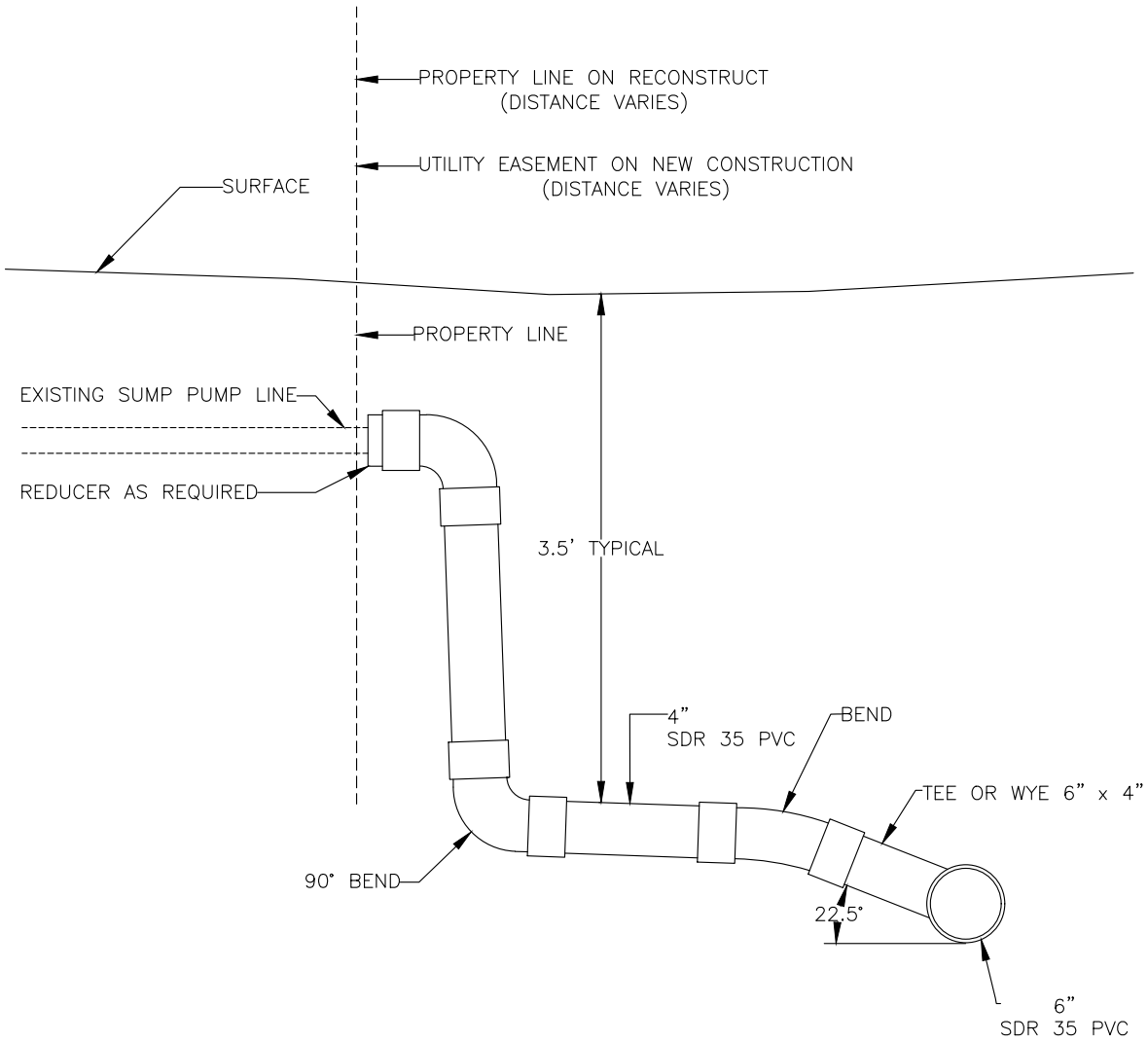

NOTE:
1. APPLICABLE WHEN CONNECTING TO SERVICE LINE TO LINE FROM THE HOUSE.
2. ALL FITTINGS SHALL BE INCIDENTAL TO THE 4" PVC PIPE DRAIN (SUMP SERVICE) BID ITEM.

APPROVED Michael J McCarty Digitally signed by Michael J McCarty Date: 2022.10.28 12:15:07-05'00' CITY ENGINEER	CITY OF MANKATO ENGINEERING 4" DRAIN STUB CONNECTION	SPECIFICATION REFERENCE	STANDARD PLATE NO. **2440A** 2 OF 2

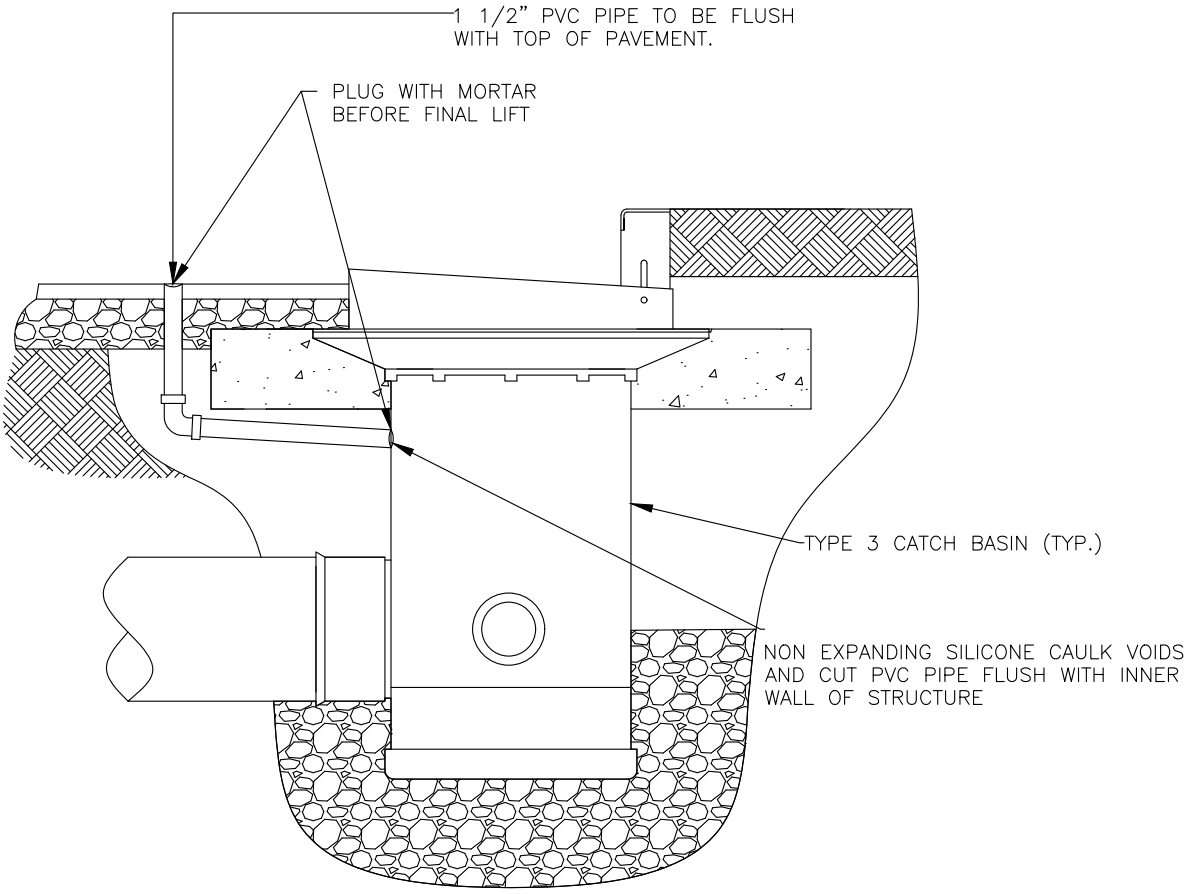

NOTE:
1. INTERIM DRAINS ARE INCIDENTAL TO STRUCTURE.
2. INTERIM DRAINS ARE TO BE INSTALLED AT ALL LOW POINT TYPE 3 CATCH BASINS.

APPROVED	CITY OF MANKATO ENGINEERING	SPECIFICATION REFERENCE	STANDARD PLATE NO.
Michael J McCarty Digitally signed by Michael J McCarty Date: 2022.10.28 12:15:09-05'00' CITY ENGINEER	INTERIM TYPE 3 CATCH BASIN DRAIN		**2460B** 1 OF 1

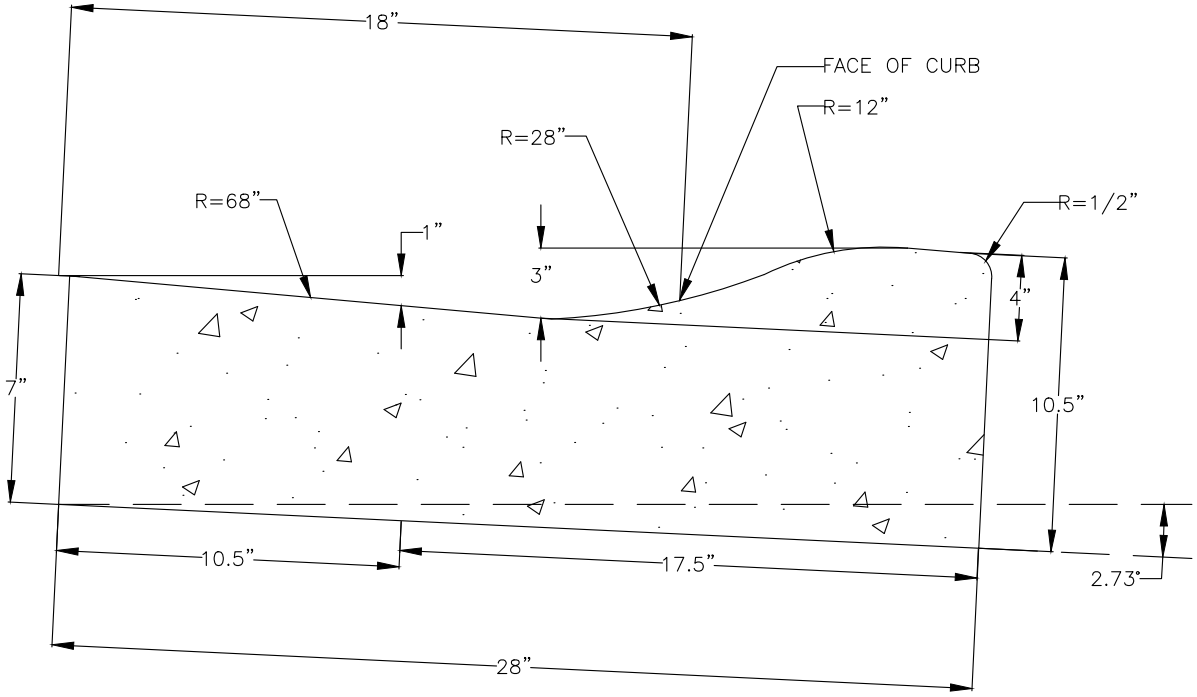

NOTES:

1. CURB SHOULD BE PLACED IN A TILTED POSITION AS SHOWN ABOVE TO PROVIDE A 3" DEPTH FROM THE TOP OF THE CURB TO THE FLOWLINE WHEN MEASURED ON A LEVEL PLANE.
2. THE FIRST 18" IS THE BASIS FOR THE FACE OF THE CURB.

APPROVED _____ Michael J McCarty Digitally signed by Michael J McCarty Date: 2022.10.28 12:15:11-05'00' _____ CITY ENGINEER	CITY OF MANKATO ENGINEERING S-418 MODIFIED CURB AND GUTTER	SPECIFICATION REFERENCE	STANDARD PLATE NO. **2500A** 1 OF 1

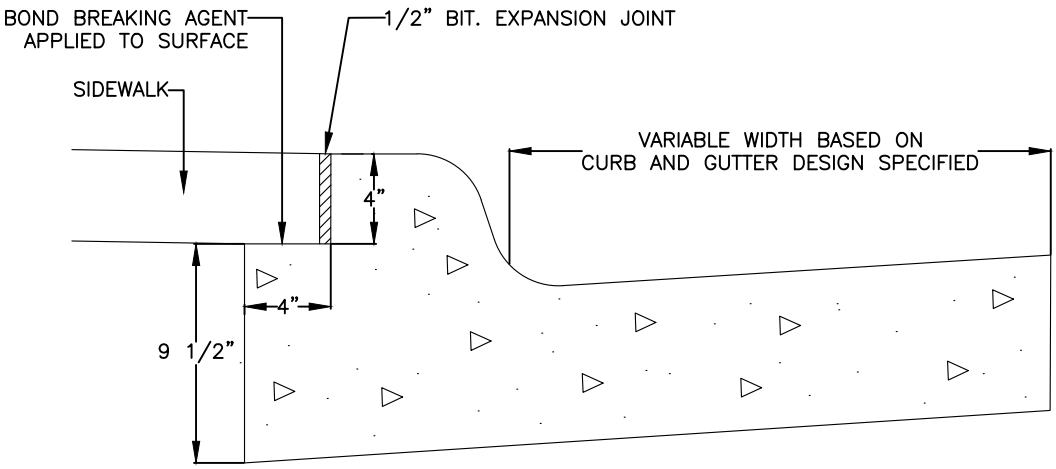

NOTE:
B–STYLE CURB AND GUTTER IS TO BE USED WHEN CURB SIDE SIDEWALK IS PRESENT

APPROVED Michael J McCarty Digitally signed by Michael J McCarty Date: 2022.10.28 12:15:12-05'00' CITY ENGINEER	CITY OF MANKATO ENGINEERING B–STYLE MODIFIED CURB AND GUTTER	SPECIFICATION REFERENCE	STANDARD PLATE NO. **2501A** 1 OF 1

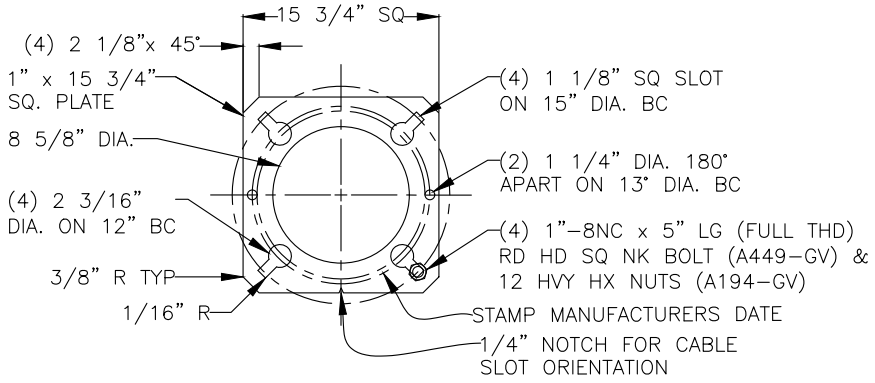

POLE BASE DETAIL

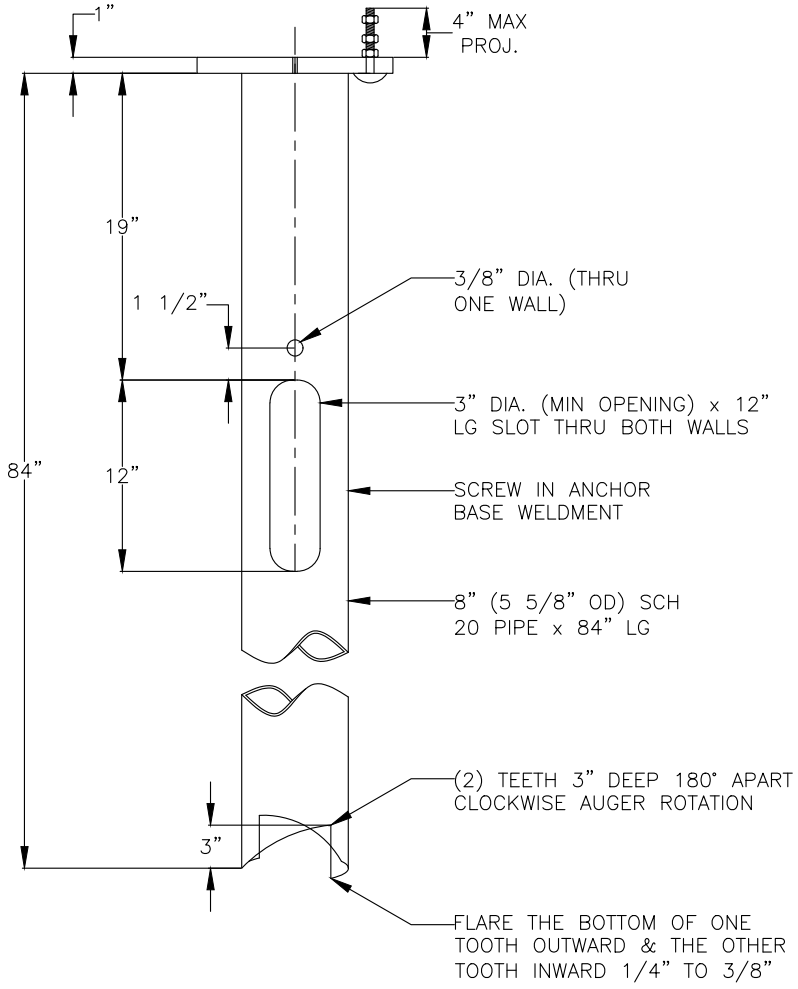

NOTE:

1. PLATE MATERIAL SHALL BE LOW CARBON STEEL 36,000 PSI MIN YIELD PER ASTM A36.
2. PIPE MATERIAL SHALL BE 8" SCH 20 PIPE 35,000 PSI MIN. YIELD PER ASTM 53 GRB.
3. ANCHOR BASE IS DESIGNED TO WITHSTAND 15,000 FT LBS OF INSTALLATION TORQUE.
4. ANCHOR BASE SHALL BE SHIPPED WITH HARDWARE BAGGED AND SECURED TO PIPE SHAFT.
5. ANCHOR BASE SHALL BE HOT DIP GALVANIZED PER ASTM A123.
6. HEAVY HEX NUTS PER ASTM A194 GR 2H (.03 OVER SIDED FOR GALVANIZED STUD) GALVANIZED NUTS PER ASTM A153.
8. LEVELING OF LIGHTING UNIT AS RECOMMENDED BY MANUFACTURER.

APPROVED Michael J McCarty Digitally signed by Michael J McCarty Date: 2022.10.28 12:15:14-05'00' CITY ENGINEER	CITY OF MANKATO ENGINEERING LIGHT BASE DESIGN STEEL (E)	SPECIFICATION REFERENCE	STANDARD PLATE NO. **2650A** 1 OF 1

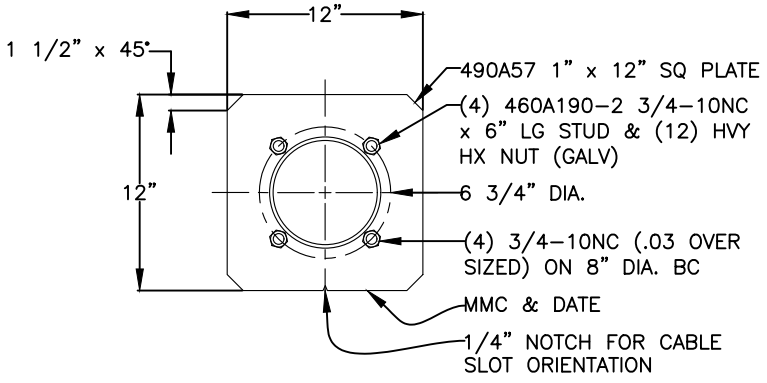

POLE BASE DETAIL

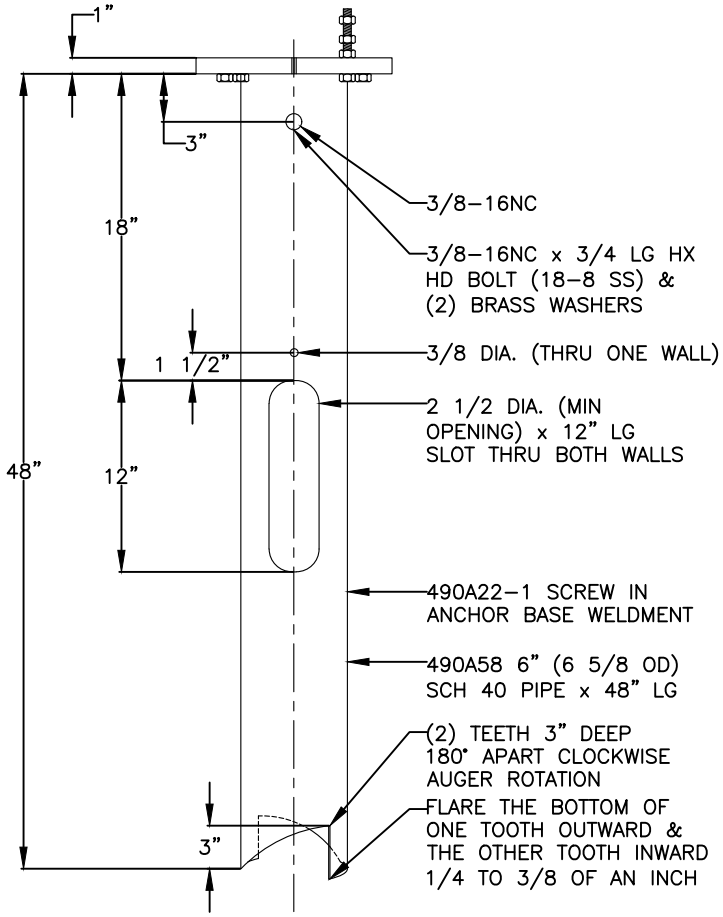

NOTE:

1. PLATE MATERIAL SHALL BE LOW CARBON STEEL 36,000 PSI MIN YIELD PER ASTM A36.
2. PIPE MATERIAL SHALL BE 6" SCH 40 PIPE 35,000 PSI MIN. YIELD PER ASTM 53 GRB.
3. ANCHOR BASE IS DESIGNED TO WITHSTAND 10,000 FT LBS OF INSTALLATION TORQUE.
4. ANCHOR BASE SHALL BE SHIPPED WITH HARDWARE BAGGED AND SECURED TO PIPE SHAFT.
5. ANCHOR BASE SHALL BE HOT DIP GALVANIZED PER ASTM A123.
6. LOW STRENGTH STUD PER ASTM F1554 GRADE 36, MATERIAL – ASTM A36 ROD (.68 DIA.) WITH 36,000 PSI MIN YIELD & 58,000–80,000 PSI TENSILE STRENGTH, CLASS 2A AMERICAN STD B1.1 ROLLED THREAD & GALVANIZED PER ASTM A153.
7. HEAVY HEX NUTS PER ASTM A563 GR A (.03 OVER SIDED FOR GALVANIZED STUD) GALVANIZED NUTS PER ASTM A153.

APPROVED	CITY OF MANKATO ENGINEERING	SPECIFICATION REFERENCE	STANDARD PLATE NO.
Michael J McCarty Digitally signed by Michael J McCarty Date: 2022.10.28 12:15:17-05'00' CITY ENGINEER	LIGHT BASE DESIGN STEEL (P)		**2651A** 1 OF 1

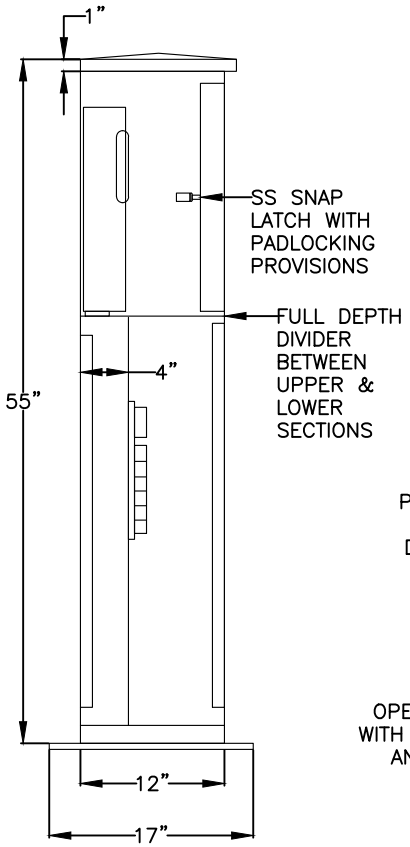

LEFT SIDE VIEW

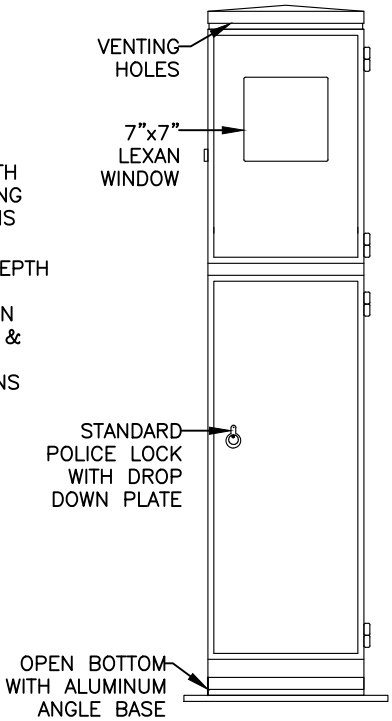

FRONT VIEW

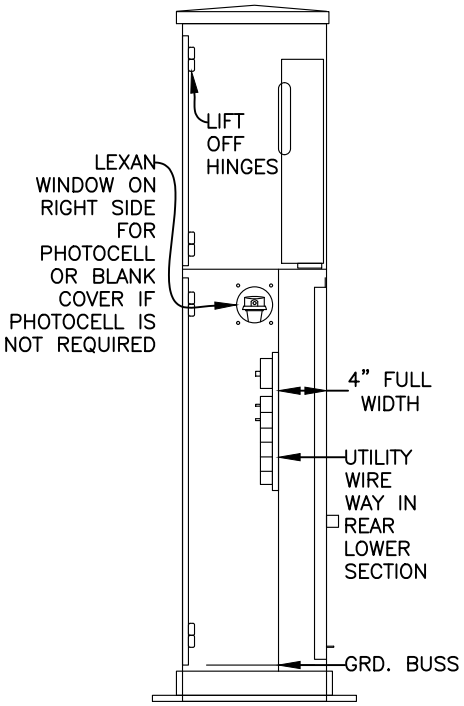

RIGHT SIDE VIEW

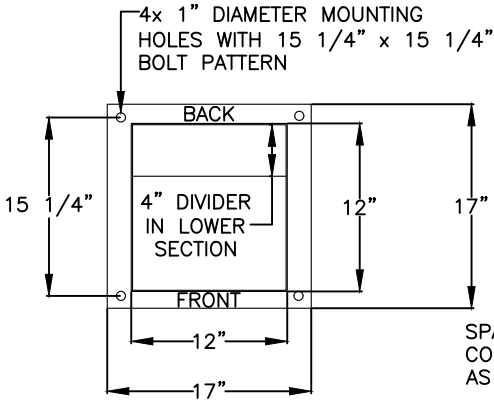

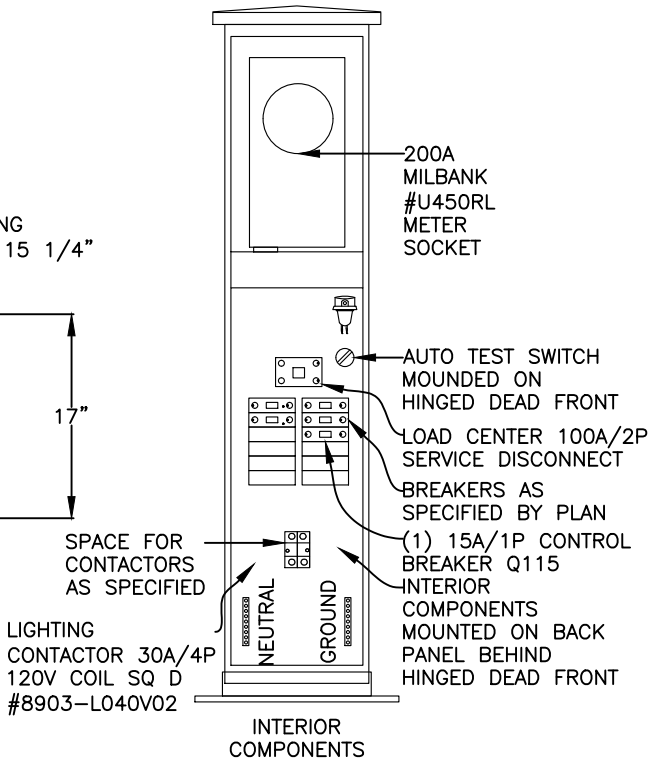

INTERIOR COMPONENTS

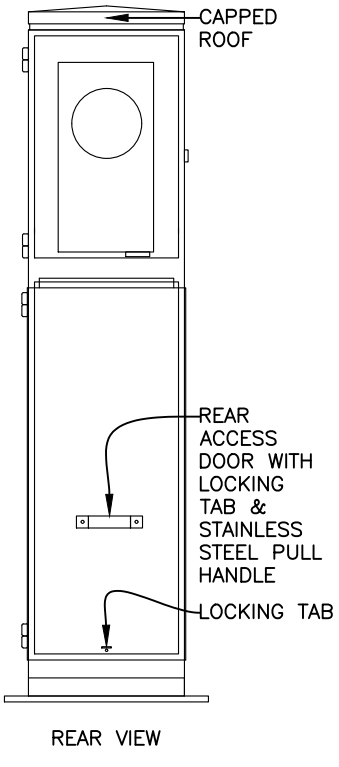

REAR VIEW

NOTE:
1. BOX SHALL BE CONSTRUCTED OF 1/8" ALUMINUM WITH NON-CORRODING HARDWARE.
2. DOORS MUST BE HAVE A NEOPRENE GASKET SEAL ON DOORS.
3. ALL ELECTRICAL WIRING MUST BE COMPLIANT WITH WITH UL508A.

APPROVED

Michael J McCarty

Digitally signed by Michael J McCarty
Date: 2022.10.28 12:15:19-05'00'

CITY ENGINEER

CITY OF MANKATO
ENGINEERING

100 AMP LIGHTING SERVICE

SPECIFICATION REFERENCE

STANDARD PLATE NO.

2660A

1 OF 1

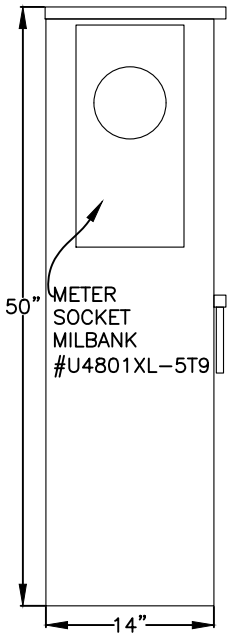

LEFT SIDE VIEW

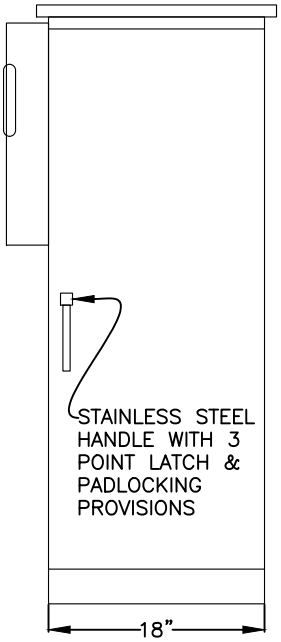

FRONT VIEW

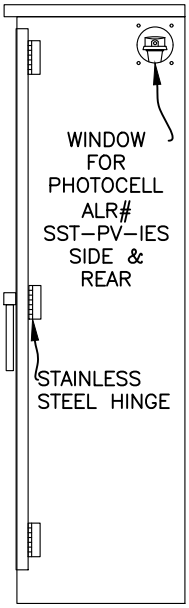

RIGHT SIDE VIEW

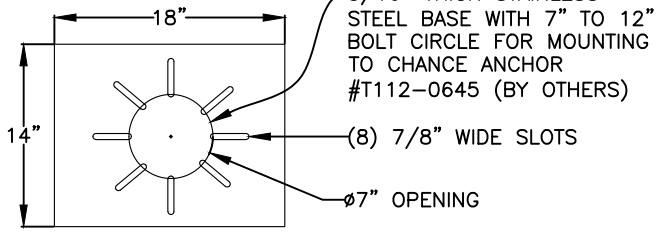

BASE LAYOUT
NOT TO SCALE

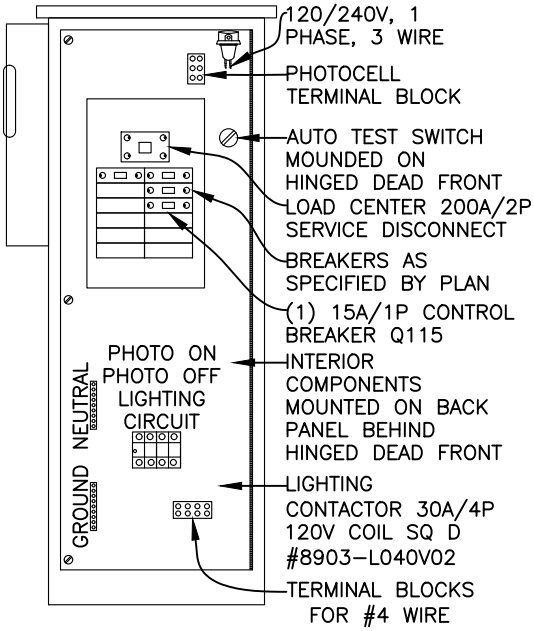

INTERIOR
COMPONENTS

NOTE:
1. BOX SHALL BE CONSTRUCTED OF 14 GA. STAINLESS STEEL 304–#4 WITH STAINLESS STEEL HARDWARE.
2. DOORS MUST BE HAVE A NEOPRENE GASKET SEAL ON DOOR.
3. ALL ELECTRICAL WIRING MUST BE CONMPLANT WITH WITH UL508A.

APPROVED Michael J McCarty Digitally signed by Michael J McCarty Date: 2022.10.28 12:15:21-05'00' CITY ENGINEER	CITY OF MANKATO ENGINEERING 200 AMP LIGHTING SERVICE	SPECIFICATION REFERENCE	STANDARD PLATE NO. **2661A** 1 OF 1

FULL & COMPACT PARKING STANDARDS

	A STALL WIDTH PARALLEL TO AISLE	B STALL DEPTH TO WALL	C STALL DEPTH TO INTERLOCK	D AISLE WITH	WALL TO WALL	E INTERLOCK TO INTERLOCK
0 DEG						
9.0 STALL	23	9	9	12	31	30
10.0 STALL	23	10	10	12	33	32
45 DEG						
8.5 STALL	12	19.5	16.5	13	52	46
9.0 STALL	12.7	19.5	16.5	12	51	45
9.5 STALL	13.4	19.5	16.5	11	50	44
60 DEG						
8.5 STALL	9.8	20.5	18.5	18	59	55
9.0 STALL	10.4	20.5	18.5	16	57	53
9.5 STALL	11.0	20.5	18.5	15	56	52
75 DEG						
8.5 STALL	8.3	20.0	19.0	25	65	63
9.0 STALL	9.3	20.0	19.0	23	63	61
9.5 STALL	9.8	20.0	19.0	22	62	60
90 DEG						
8.5 STALL	8.5	18.5	18.5	28	65	65
9.0 STALL	9.0	18.5	18.5	26	63	62
9.5 STALL	9.5	18.5	18.5	25	62	62

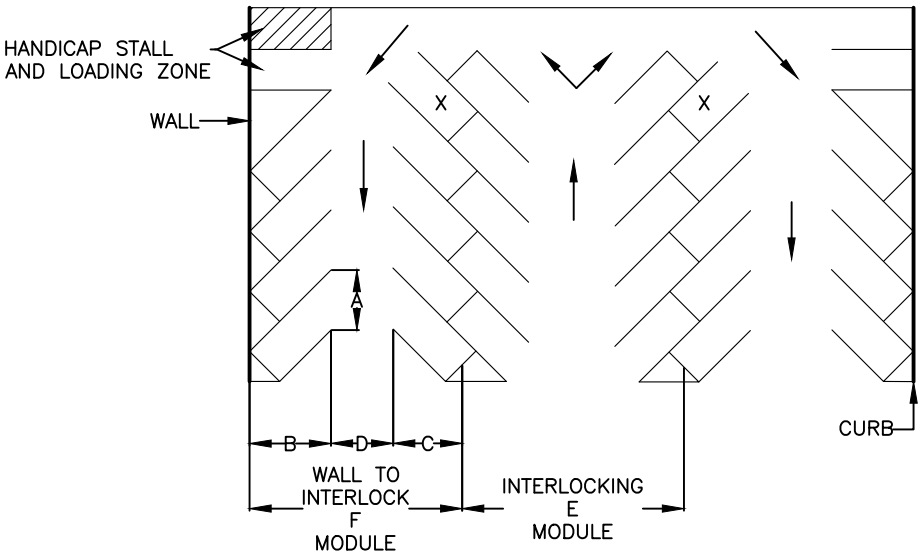

NOTES:

1. PARKING LAYOUT DIMENSION (SHOWN IN FT) FOR 9' x 18' STALLS AT VARIOUS ANGLES.
2. ALL PARKING MUST MEET THE FOLLOWING:
   - HARD SURFACING
   - APPROVED DRAINAGE
   - LANDSCAPING
   - STRIPING
   - SIGNING
3. HANDICAP STALLS
   - THE NUMBER OF HANDICAP STALLS AND UNLOADING AREA SHALL BE DETERMINED BY THE MOST CURRENT BUILDING CODE.
   - THE MINIMUM WIDTH FOR A HANDICAPPED STALL SHALL BE 96" WITH A EQUAL LOADING ZONE.

APPROVED _____ Michael J McCarty Digitally signed by Michael J McCarty Date: 2022.10.28 12:15:22-05'00' _____ CITY ENGINEER	CITY OF MANKATO ENGINEERING PARKING STANDARDS	SPECIFICATION REFERENCE	STANDARD PLATE NO. **2700A** 1 OF 1

TOP VIEW

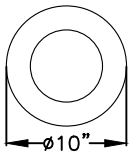

FRONT VIEW

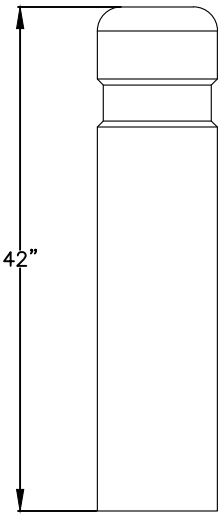

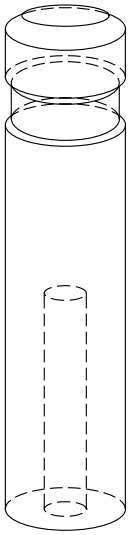

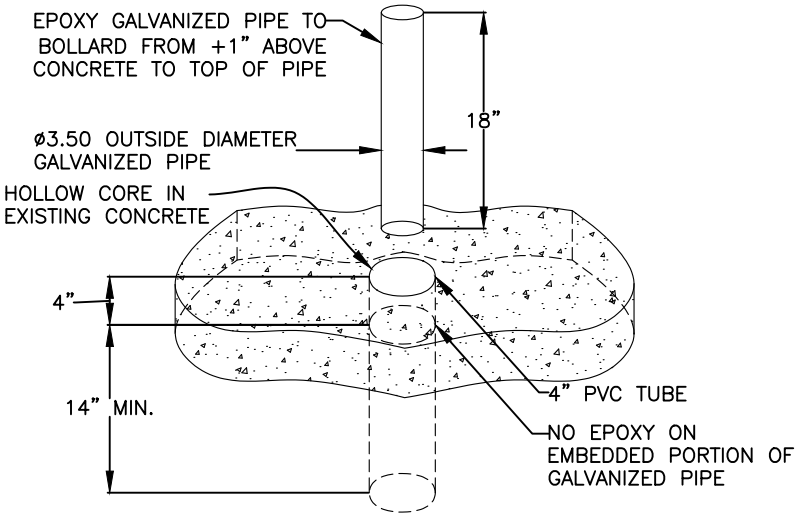

NOTES:
1. BOLLARD SHALL BE PETERSON MODEL GB OR APPROVED EQUAL.
2. 3” GALVANIZED PIPE PROTRUDING 18” ABOVE SURFACE.
3. EMBED A MIN OF 18” AND A MAX OF 24” BELOW SURFACE.
4. PIPE SHALL BE 3” ID, 3½” OD NOMINAL, SCHEDULE 40 GALVANIZED.
5. PVC SHALL BE 4” ID SCHEDULE 40.

APPROVED Michael J McCarty Digitally signed by Michael J McCarty Date: 2022.10.28 12:15:24-05'00' CITY ENGINEER	CITY OF MANKATO ENGINEERING BOLLARD ANCHORING	SPECIFICATION REFERENCE	STANDARD PLATE NO. **2710B** 1 OF 1

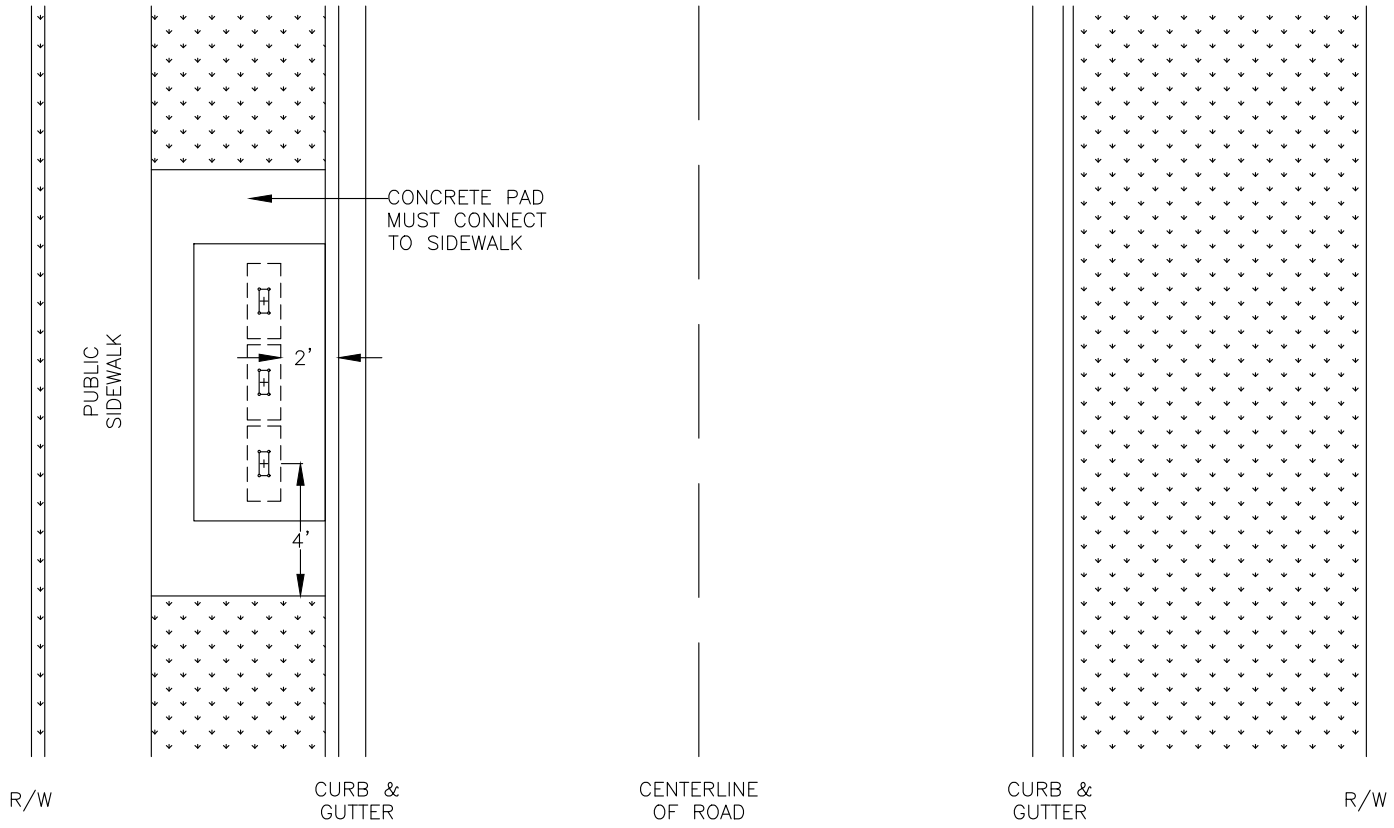

STANDARD LOCATION FOR USPS NEIGHBORHOOD DELIVERY & COLLECTION BOX UNITS (NDCBU)

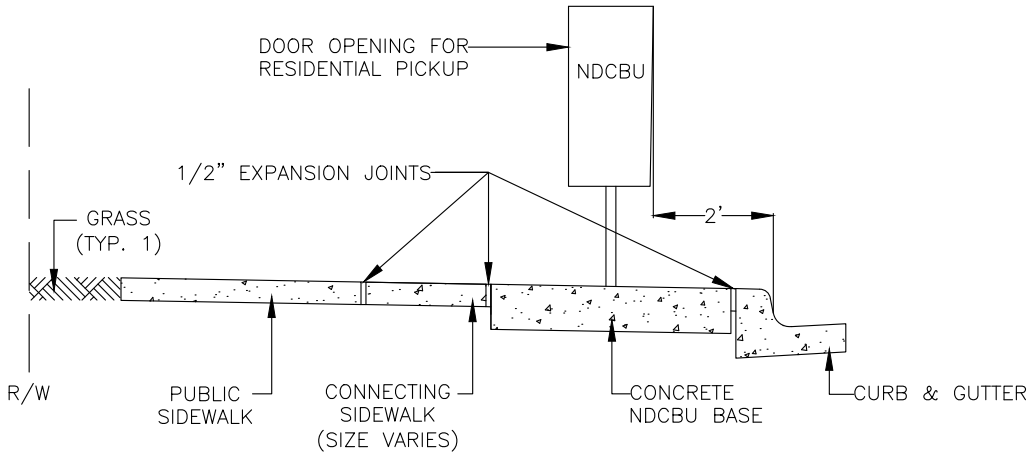

STANDARD LOCATION DETAIL

NOTES:
1. POSTAL UNITS SHALL BE PLACED ON SIDEWALK SIDE OF ROAD.
2. CONCRETE PAD SHALL LINK SIDEWALK TO NDCBU.
3. SIDEWALK SHALL BE 6'' MINIMUM THICKNESS.
4. WHEN MULTIPLE NDCBU'S ARE PRESENT BOXES ARE TO BE NO MORE THAN 2" APART.

APPROVED	CITY OF MANKATO ENGINEERING	SPECIFICATION REFERENCE	STANDARD PLATE NO.
Michael J McCarty Digitally signed by Michael J McCarty Date: 2022.10.28 12:15:26-05'00' CITY ENGINEER	STD. NDCBU MAILBOX LOCATION		**2720A** 1 OF 3

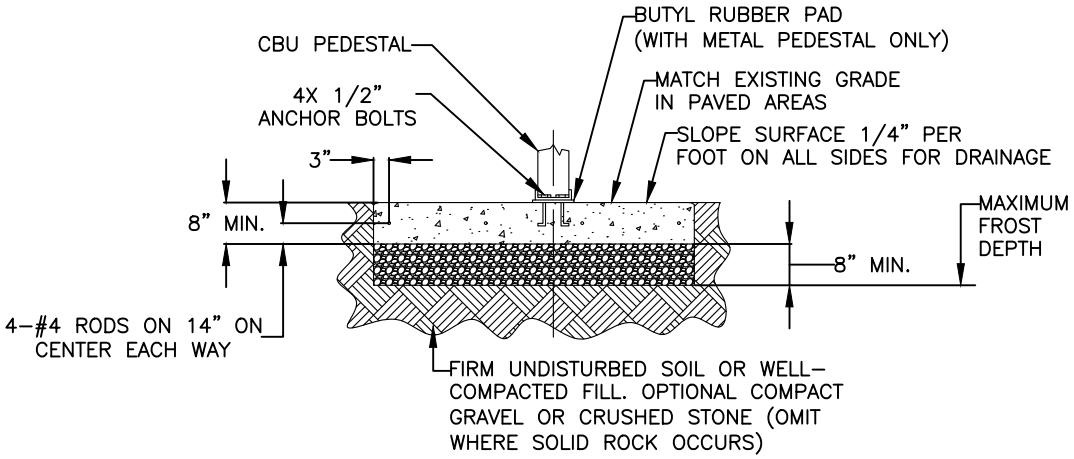

CONCRETE PAD DETAIL

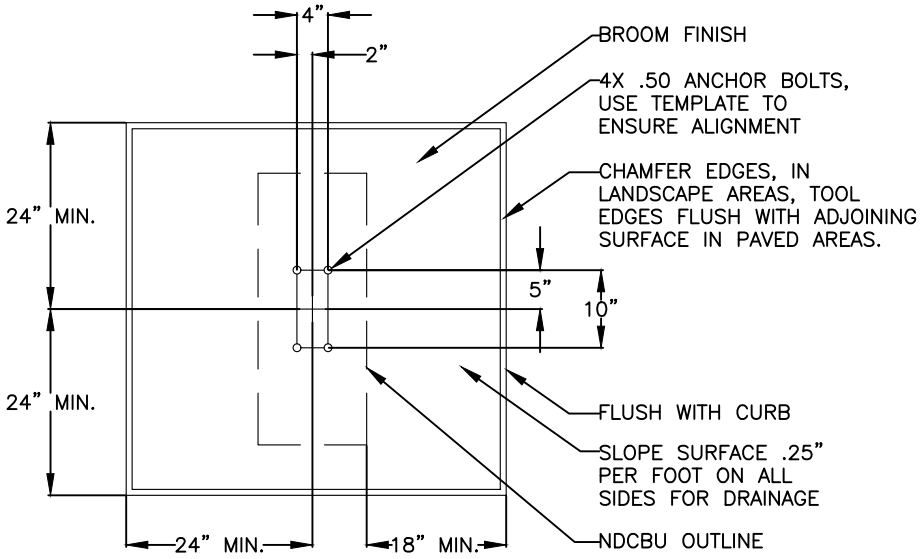

NOTES:
1. CONCRETE SHALL HAVE A COMPRESSIVE STRENGTH OF 3000 PSI @ 28 DAYS, CONTAIN 4% MIN – 6% MAX AIR ENTRAINMENT AND BE PLACED WITH A 3.50 – 4.50 SLUMP IN ACCORDANCE WITH ACI 301
2. REINFORCING STEEL RODS SHALL CONFORM TO ASTM A615, GRADE 60
3. ANCHOR BOLTS SHALL CONFORM TO ASTM A193, GRADEB8M, TYPE 316 STAINLESS STEEL

APPROVED	CITY OF MANKATO ENGINEERING	SPECIFICATION REFERENCE	STANDARD PLATE NO.
Michael J McCarty Digitally signed by Michael J McCarty Date: 2022.10.28 12:15:29-05'00' CITY ENGINEER	STD. NDCBU MAILBOX LOCATION SINGLE UNIT		**2720A** 2 OF 3

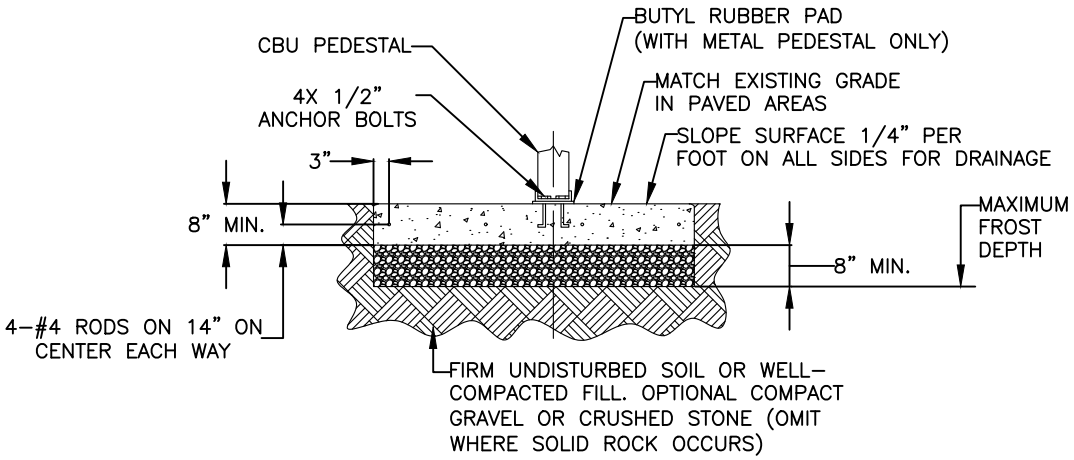

CONCRETE PAD DETAIL

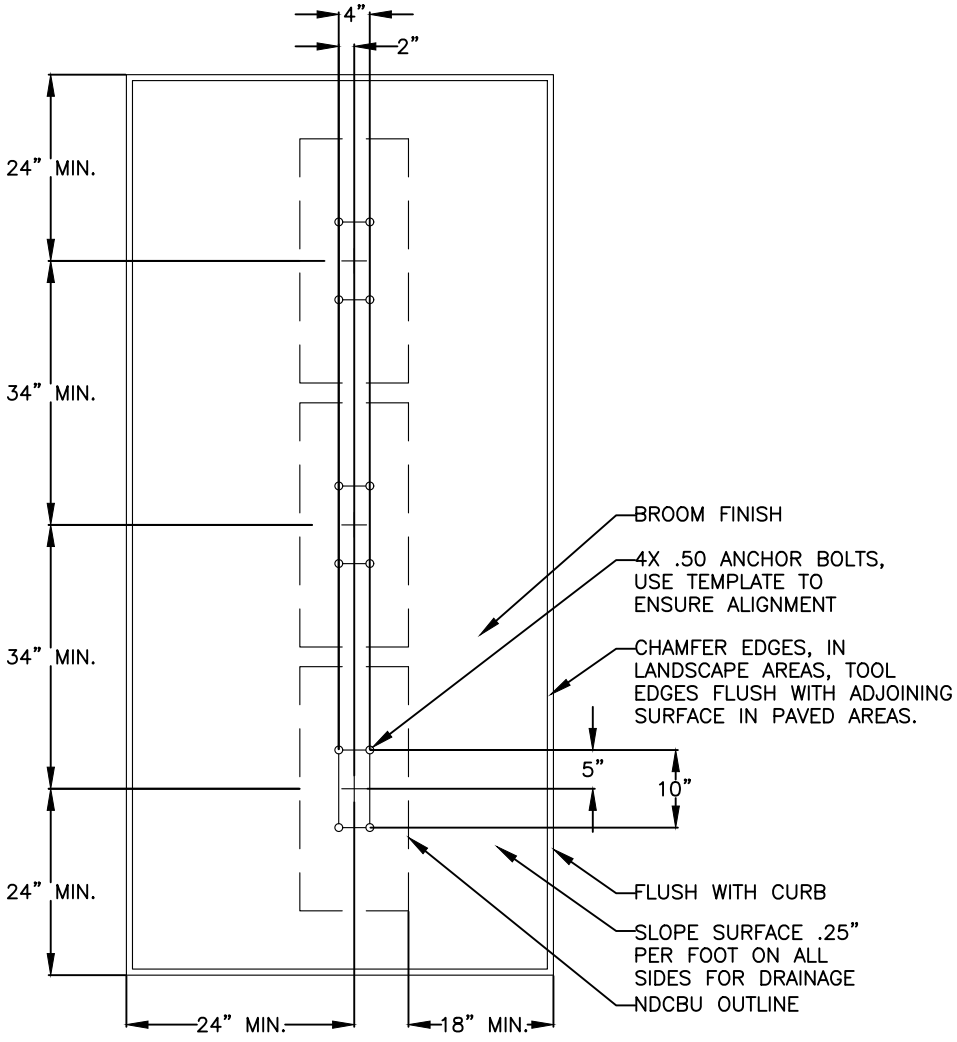

NOTES:
1. CONCRETE SHALL HAVE A COMPRESSIVE STRENGTH OF 3000 PSI @ 28 DAYS, CONTAIN 4% MIN – 6% MAX AIR ENTRAINMENT AND BE PLACED WITH A 3.50 – 4.50 SLUMP IN ACCORDANCE WITH ACI 301
2. REINFORCING STEEL RODS SHALL CONFORM TO ASTM A615, GRADE 60
3. ANCHOR BOLTS SHALL CONFORM TO ASTM A193, GRADEB8M, TYPE 316 STAINLESS STEEL

APPROVED	CITY OF MANKATO ENGINEERING	SPECIFICATION REFERENCE	STANDARD PLATE NO.
Michael J McCarty Digitally signed by Michael J McCarty Date: 2022.10.28 12:15:31-05'00' CITY ENGINEER	STD. NDCBU MAILBOX LOCATION MULTIPLE UNIT		**2720A** 3 OF 3

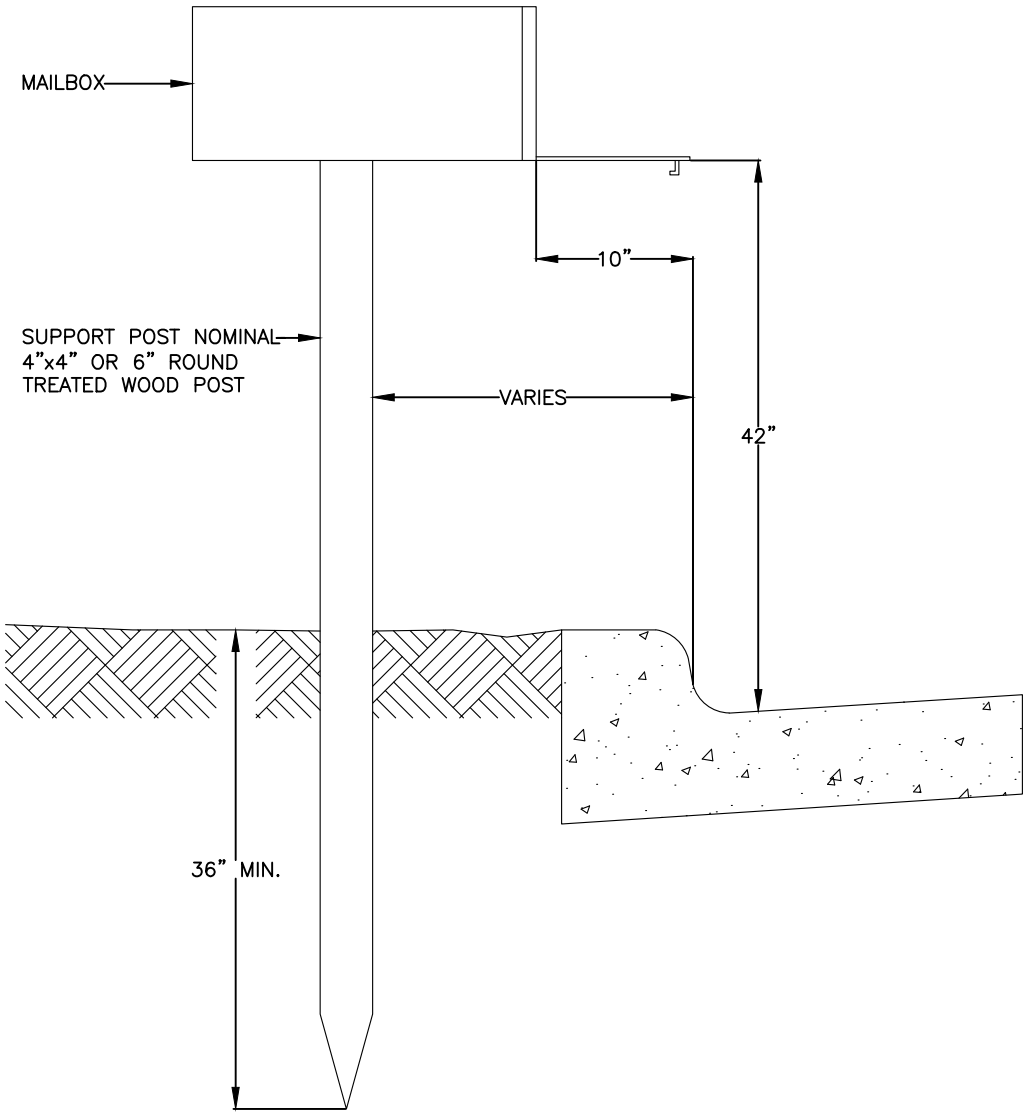

NOTE:
GOPHER ONE CALL REQUIRED FOR POST SETTING, NO. 1–800–252–1166

APPROVED Michael J McCarty Digitally signed by Michael J McCarty Date: 2022.10.28 12:15:33-05'00' CITY ENGINEER	CITY OF MANKATO ENGINEERING STANDARD MAILBOX LOCATION	SPECIFICATION REFERENCE	STANDARD PLATE NO. **2721A** 1 OF 1

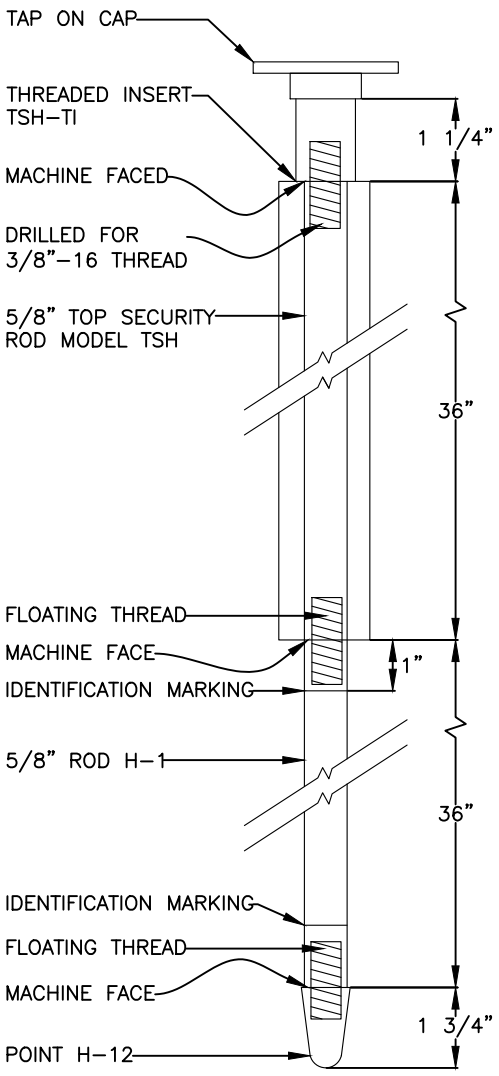

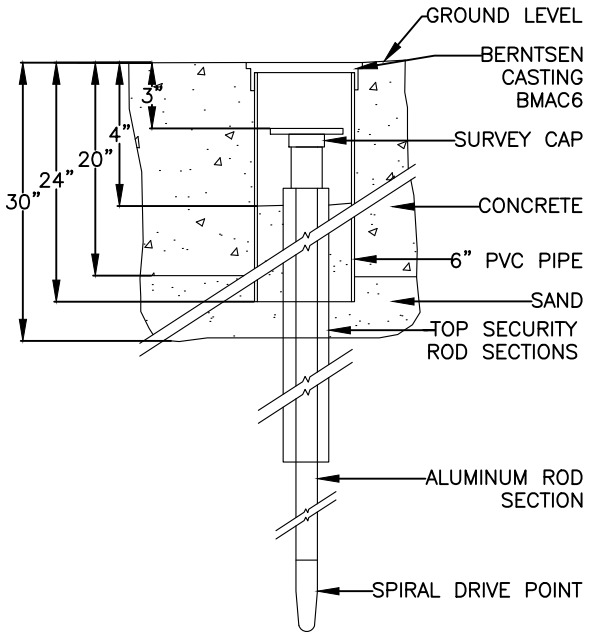

LAWN CONDITION

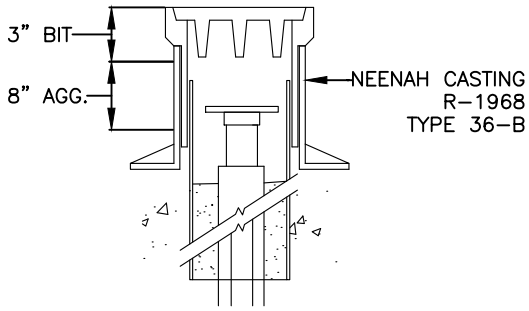

TRAFFIC CONDITION

APPROVED

Michael J McCarty

Digitally signed by Michael J McCarty
Date: 2022.10.28 12:15:35-05'00'

CITY ENGINEER

CITY OF MANKATO
ENGINEERING

GPS 3–D TOP SECURITY ROD MONUMENT SYSTEM

SPECIFICATION REFERENCE

STANDARD PLATE NO.

2740A

1 OF 2

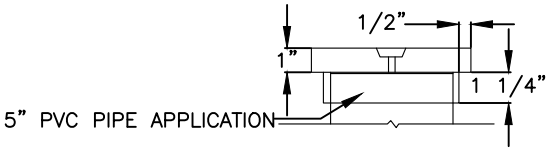

SIDE VIEW
AT "B" END WITH 5" PVC PIPE
BMAC–5

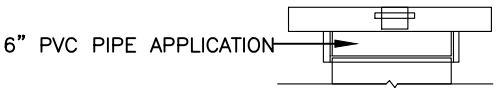

SIDE VIEW
AT "A" END WITH 6" PVC PIPE
BMAC–6

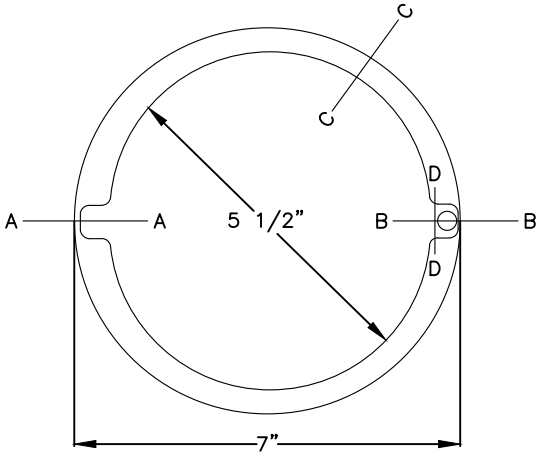

TOP VIEW

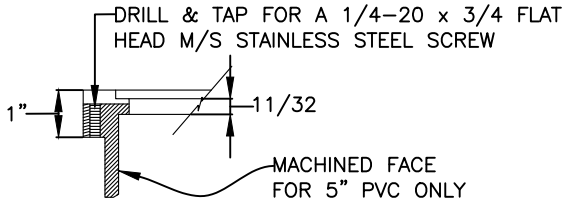

RING SECTION THRO B–B

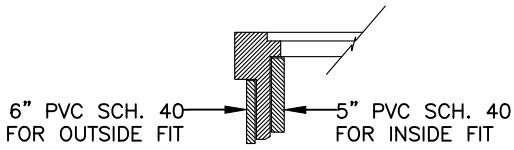

RING SECTION THRU C–C

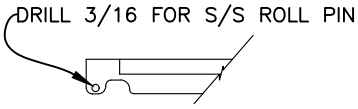

COVER SECTION THRU A–A

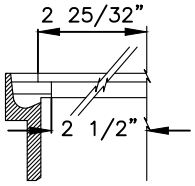

RING SECTION THRU A–A

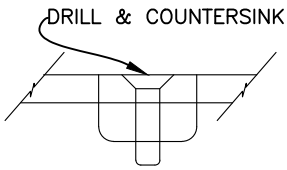

COVER SECTION THRU D–D

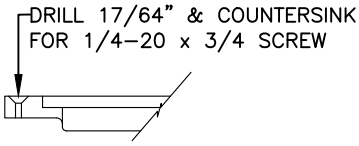

COVER SECTION THRU B–B

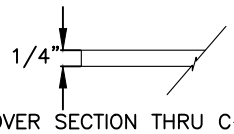

COVER SECTION THRU C–C

NOTE:
BERNTSEN CASTING BMAC6 FOR USE
IN LAWN CONDITIONS ONLY

APPROVED Michael J McCarty Digitally signed by Michael J McCarty Date: 2022.10.28 12:15:37-05'00' CITY ENGINEER	CITY OF MANKATO ENGINEERING GPS 3–D TOP SECURITY ROD MONUMENT SYSTEM	SPECIFICATION REFERENCE	STANDARD PLATE NO. **2740A** 2 OF 2